SAMSUNG

FRIDGE

RB193KASW
RB193KASB
RB193KABB
RB193KAVQ
RB213KASB
RB213KASW
RB213KABB
RB213KAVQ

SERVICE Manual

FRIDGE

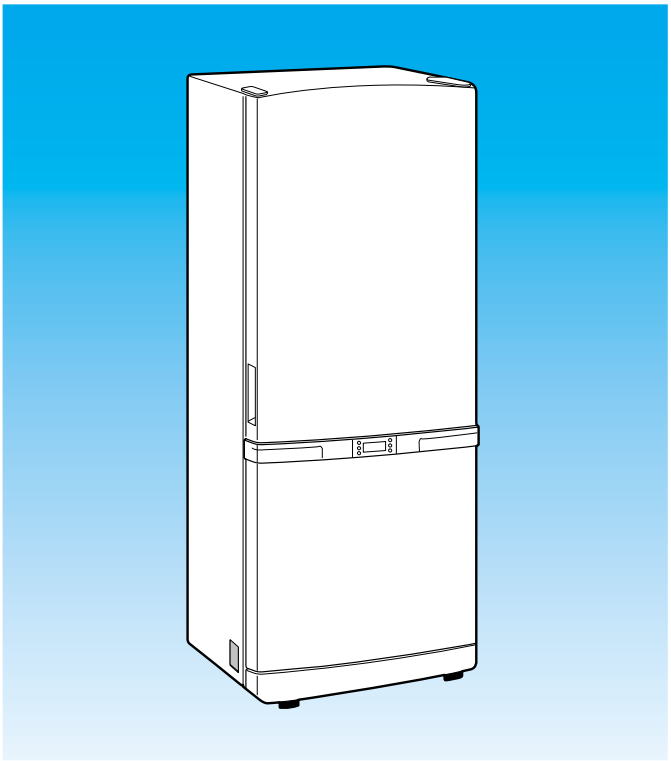

PRODUCT FEATURE

- **Reversible Door**

For the latest parts information, Please access to our service web site (http://itself.sec.samsung.co.kr)

WARNING

IMPORTANT SAFETY NOTICE

The service guide is for service men with adequate backgrounds of electrical, electronic, and mechanical experience. Any attempt to repair a major appliance may result in personal injury and property damage. The manufacturer or dealer cannot be responsible for the interpretation of this information.

SAMSUNG ELECTRONICS AMERICA, INC.

Technical Service Guide

Copyright ©2005

All rights reserved. This service guide may not be reproduced in whole or in part in any form without written permission from the SAMSUNG ELECTRONICS Company.

Contents

1. INSTALLATION · · · · · 4

2. NOMENCLATURE · · · · · 4

3. PRODUCT SPECIFICATIONS · · · · · 5

4. ELECTRICAL PART SPECIFICATIONS & STANDARD · · · · · 5

5. INTERIOR VIEWS AND DIMENSIONS · · · · · 7

6. REFRIGERATION CYCLE AND COOL AIR CIRCULATION ROUTE · · · · · 9

7. MECHANICAL DISASSEMBLY · · · · · 11

8. REVERSIBLE THE DOOR SWING · · · · · 18

9. TEMP CONTROL &OPERATION FUNCTIONS · · · · · 23

10. OPERATION PRINCIPLES BY PARTS OF CIRCUIT · · · · · 39

11. DIAGNOSTICS · · · · · 46

12. ILLUSTRATED PARTS CATALOG · · · · · 61

13. REFERENCE · · · · · 70

14. PCB DIAGRAM · · · · · 73

15. CONNECTOR ARRANGEMENT&DESCRIPTIONS · · · · · 74

16. BLOCK DIAGRAM · · · · · 75

17. CIRCUIT DIAGRAM · · · · · 76

18. WIRING SCHEMATIC · · · · · 77

19. TEMP TO RESISTANCE OF SENSOR &MICOM PORT VOLTAGE · · · · · 78

1. INSTALLATION

1) To protect fridge in movement
Use padded hand truck from side only.

2) Remove all protective tape and pad from the fridges.
Connect power cord. Adjust the clearance between the doors.

3) Temperature controls and preset in the factory for recommended settings.
The fridge should runs smoothly and lower the temperature gradually.

4) Once the fridge temperature is sufficiently low
It is recommended to store foods in the fridge.
It takes a few hours to reach the preset temperatures.

2. NOMENCLATURE

2005 Models

R B 19 3 K A SB / XAC

Company Name

COLOR ; SB-STAINLESS PLATINUM, SW-SNOW WHITE
VQ-BISQUE GLOSSY, BB-BLACK

A : W2-PJT

Buyer : CANADA(CAMCO)

OPTION ; BETTER

Capacity ; 19:19CU,FT 21:21CU,FT

B - BOTTOM MOUNTED FREEZER (BMF)

Product ; R - FRIDGE

Label Location

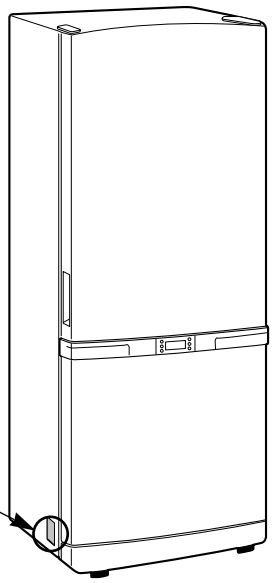

3. PRODUCT SPECIFICATIONS

Model		RB193KASW, RB193KASB, RB193KAVQ, RB193KABB	RB213KASW, RB213KASB, RB213KABB, RB213KAVQ
Type		BMF 2 Door	
Temperature control		Electronic control	
Net Capacity (ft^3)	Total	18.7	20.4
	Freezer	5.9	6.5
	Fridge	12.8	13.9
Net dimension (W X D X H)		32.3 X 28.3 X 69.9	32.3 X 30.3 X 69.9
Foam	Cabinet insulation	CYCLO-PENTANE	
	Door insulation	CYCLO-PENTANE	
Liner	Cabinet	A.B.S	
	Door	A.B.S	
Net weight(lb)		227	241

4. ELECTRICAL PART SPECIFICATIONS & STANDARD

ITEM		STANDARD	
Model		RB193KASW, RB193KASB, RB193KAVQ, RB193KABB	RB213KASW, RB213KASB, RB213KABB, RB213KAVQ
Rated Voltage		115V	
Frequency		60HZ	
Compressor	Model	MK172C-L2U	
	Starting type	RSCR	
	Refrigerant	R134a	
	Oil Charge	Freol α-10c(Ester), 265cc	
Evaporator	Freezer	Split Fin & Tube Type	
	Fridge	Split Fin & Tube Type	
Condenser		Forced & Natural Convection Type	
Dryer		Molecular Sieve XH-9	
Capillary tube		ID0.82 X L3000	
Earth screw		BSBN(Brass screw)	
Door switch		AC125V 1.4A(SSD-6D)	

ELECTRICAL PART SPECIFICATIONS & STANDARD

ITEM				STANDARD	
Temperature	Freezer	Type	Temperature Selection	ON(℃)	OFF(℃)
		F-Sensor	-25℃	-23℃	-27℃
			-19℃	-17℃	-21℃
			-14℃	-12℃	-16℃
	Fridge	Type	Temperature Selection	ON(℃)	OFF(℃)
		R-Sensor	1℃	2.5℃	-0.5℃
			3℃	4.5℃	1.5℃
			7℃	8.5℃	5.5℃
Electrical parts	Defrosting	First Defrost Cycle (Concurrent Defrost of F and R)		4hr ±10min	
		Defrost Cycle(FRE)		Min. 12hrs, Max. 22Hrs	
		Defrost Cycle(REF)		Min. 6hrs, Max. 11Hrs	
		Pause Time		10±2min	
	Sensor	Freezer-Sensor		THERMISTOR (502AT), SPEC:5.0KΩ AT 25℃	
		Fridge-Sensor			
		FRE Evap-Sensor			
		REF Evap-Sensor			
		Ambient TEMP-Sensor			
	Heater	Defrost Heater(FRE)		242W	
		Drain Heater(FRE)		52W	
		Defrost Heater(REF)		120W	
		Drain Heater(REF)		38W	
	Fuse	Thermal-Fuse for preventing overheating of Freezer Defrost-Heater		AC250V 10A 77±5˚C	
		Thermal-Fuse for preventing overheating of Freezer Defrost-Heater			
	Capacitor	RUNNING	250VAC, 12㎌		
	Over-Load Protector	MODEL	4TM437RHBYY-53		
		TEMP. ON	69±9℃		
		TEMP. OFF	130±5℃		
	STARTING-RELAY	MODEL	J531Q33E100M200-2		
		Initial Resistance	10±20Ω		
	MOTOR-FAN	FRE.	IS3210-SNP6D		
		REF.	IS3208-SNP6H		
		CIRCUIT	IS3208-SCH6A		
	LAMP	FRE(INCANDESCENT)	110V-130V/15W		
		REF(INCANDESCENT)	110V-120V/40W		

• Deli drawer

Pull it out to disassemble.

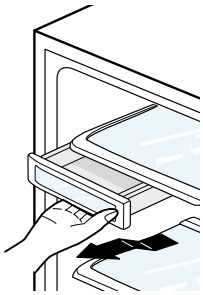

• Door Bin

Push it up and slide it out to disassemble.

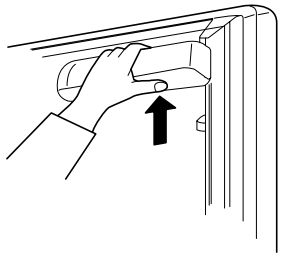

Light

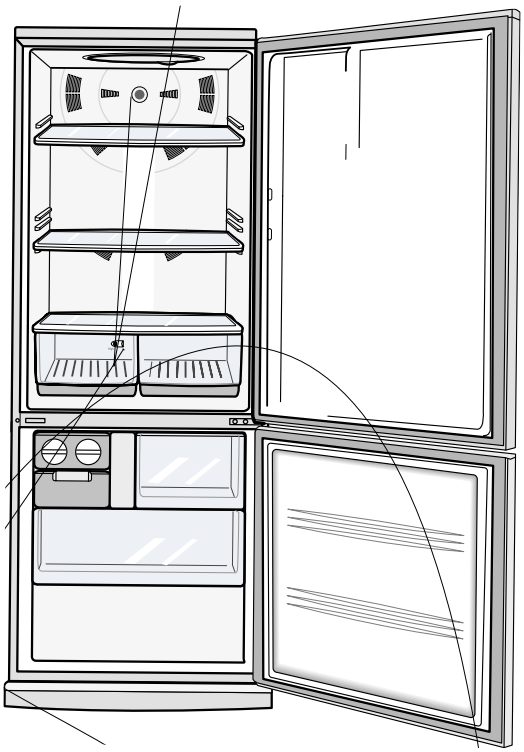

• Gallon Bin

• Glass Shelf

Pull it out until its stop

Tilt down and slide it out.

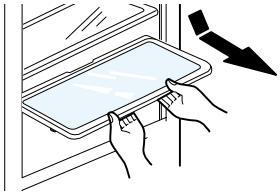

• Vegetable Drawer

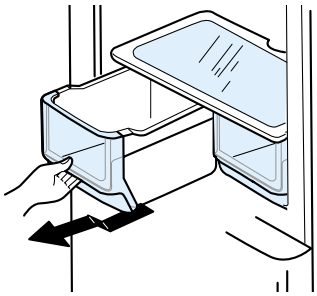

• Ice trays

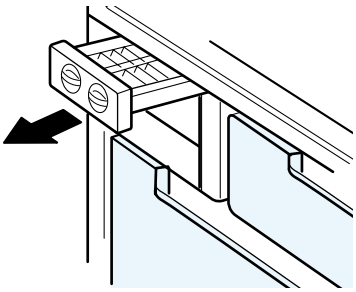

• Freezer Drawer

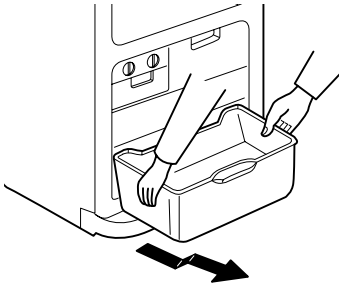

Interior Views and Dimensions

5-2) Dimensions of Fridge (Inches)

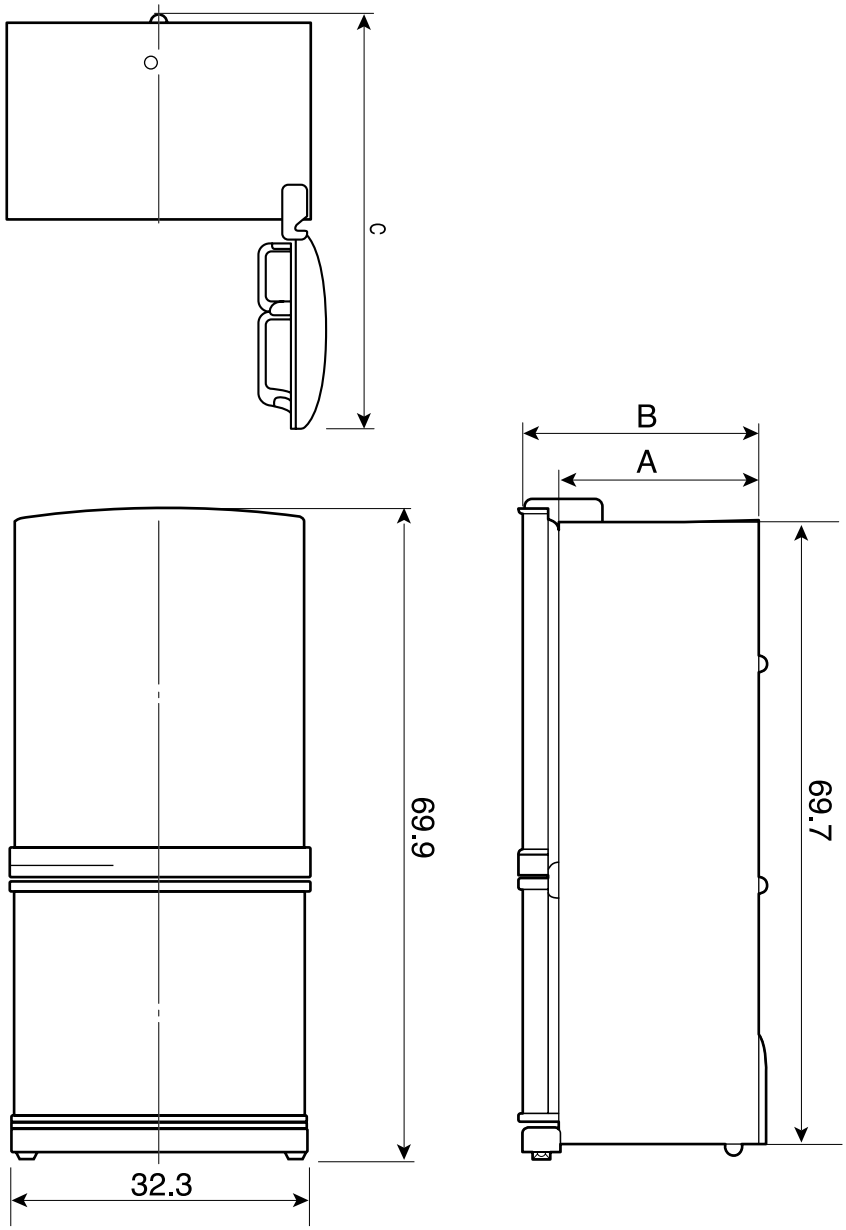

MODEL	A	B	C
RB195	24.3	28.3	57.8
RB215	26.3	30.3	59.8

6. Refrigeration Cycle and Cool Air Circulation Route

6-1) Refrigerant Route in Refrigeration cycle

Compressor → Sub condenser → Cluster pipe → Hot pipe → Dryer → Capillary tube → R-Evaporator → F-Evaporator → Accumulator → Suction pipe → Compressor

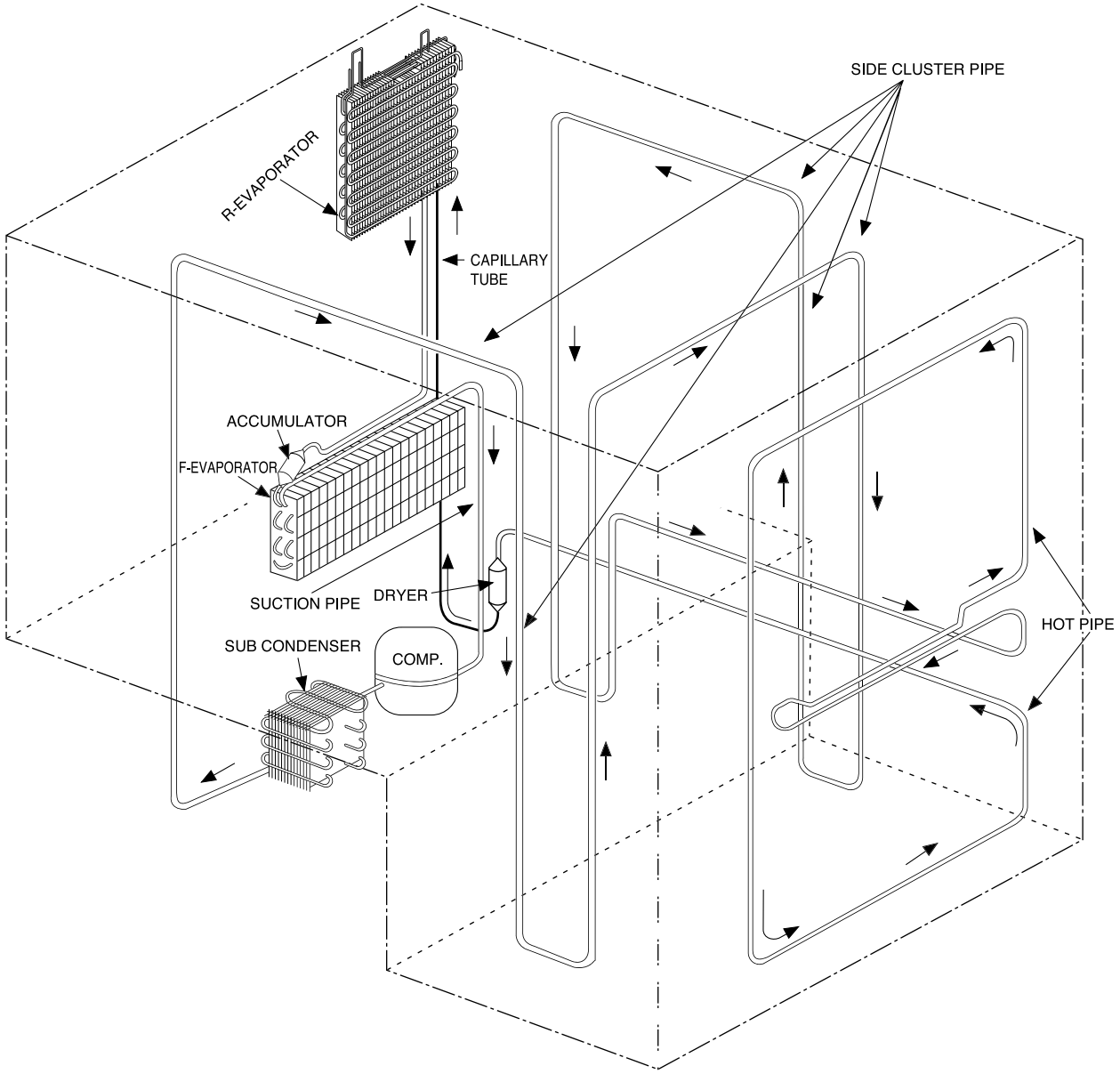

Refrigeration Cycle and Cool Air Circulation Route

6-2) Cool Air Circulation

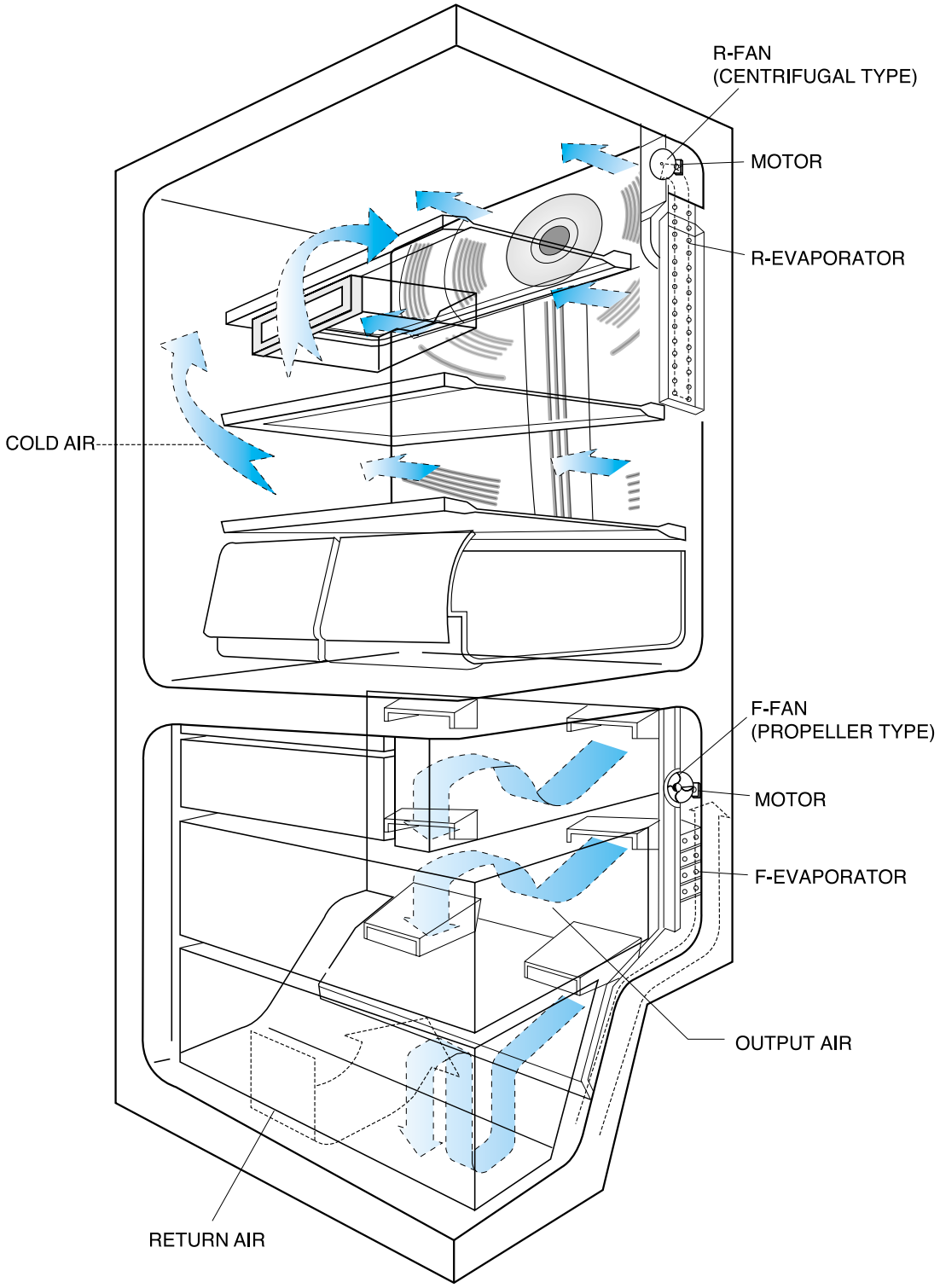

7. Mechanical Disassembly

Fridge Disassembly

Control Panel 12

Fridge Light 13

Freezer Light 16

Evaporator Cover in the Fridge 14

Evaporator Cover in the Freezer 15

Evaporator in the Freezer 16

Evaporator in the Fridge 16

Machine Compartment & Electric Box 17

Mechanical Disassembly

Control Panel

1. Remove the screws.

2. Pull out the control panel.

3. Disconnect the wire connector.

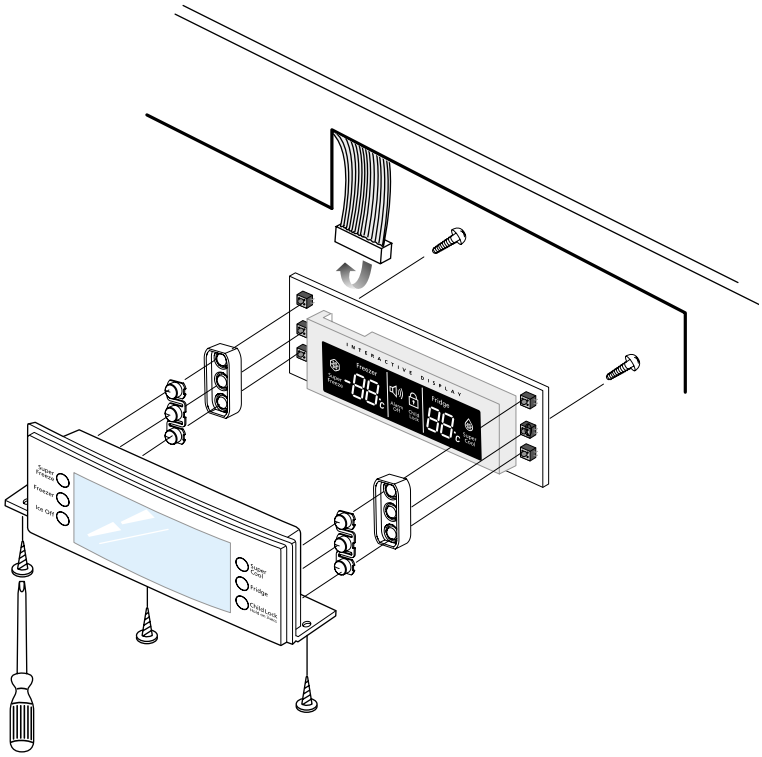

Mechanical Disassembly

Warning

Always unplug the power cord before replacing the fridge lamp.
There is the danger of electric shock.

Fridge Light

1. Remove the screw.

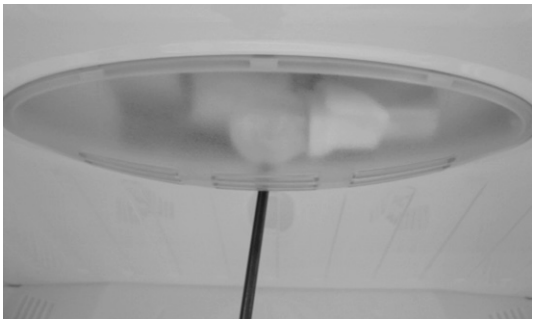

2. Remove the lamp cover by unlocking the tabs and pulling the cover down.

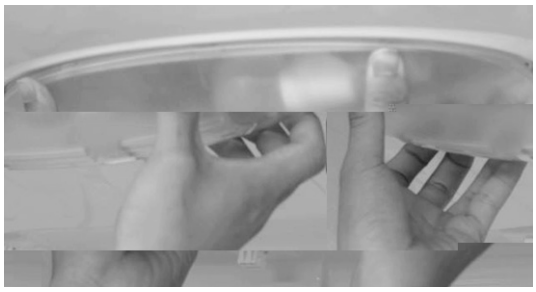

3. Replace the lightbulb by turning it counter-clockwise.

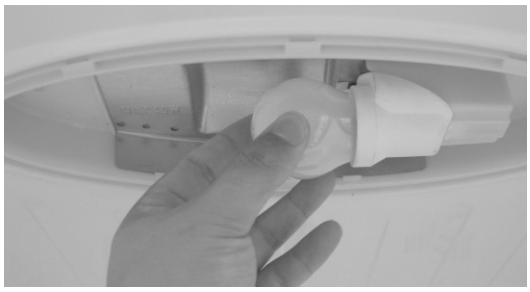

4. After replacing the bulb, reattach the cover and the screw it again.
5. Plug the power cord in and check the lamp by pressing the R-door switch.

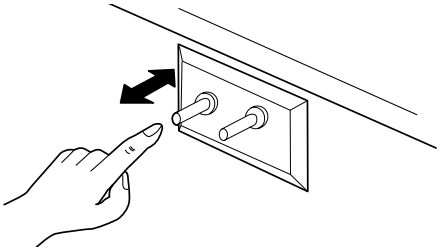

Freezer Light

1. Remove the cover by pressing the bottom tab.

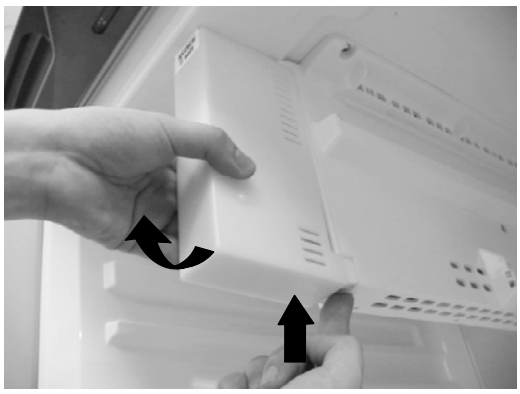

2. Replace the two bulb by turning it counter-clock wise.

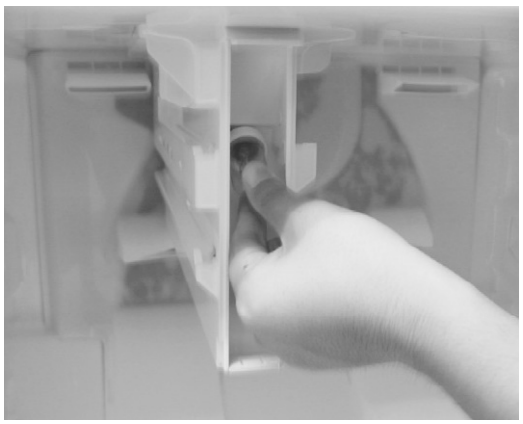

3. Reattach the cover and check the lamp by pressing door switch.

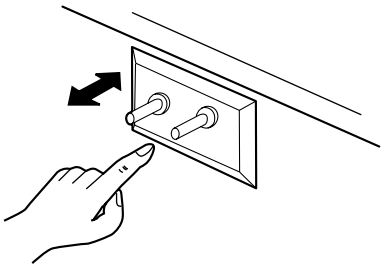

Mechanical Disassembly

Evaporator Cover in the Fridge

1. Remove all shelves and drawers from the fridge.

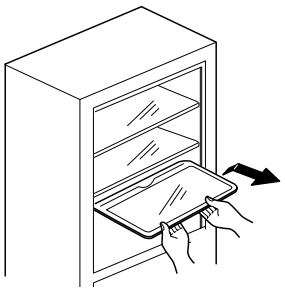

2. Pull out the screw caps with a small flat-blade screwdriver.
3. Remove 6 Phillps screws from the cover.

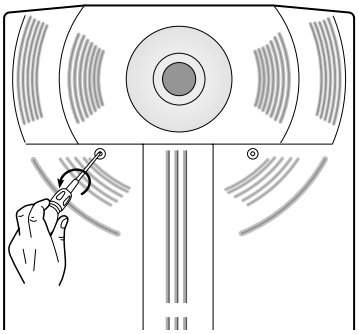

4. Unlock the 2 tabs with a flat-blade screwdriver on each side of the bottom cover.
5. Remove the evaporator cover by pulling out from the bottom of the evaporator cover.

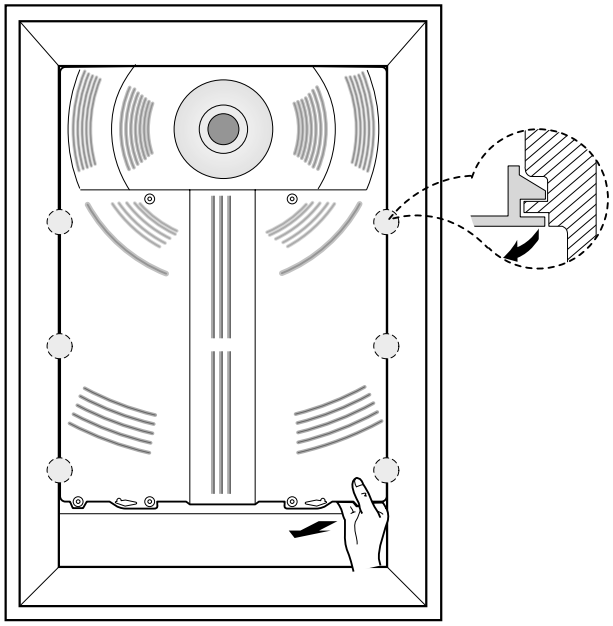

6. Disconnect the wire connector.

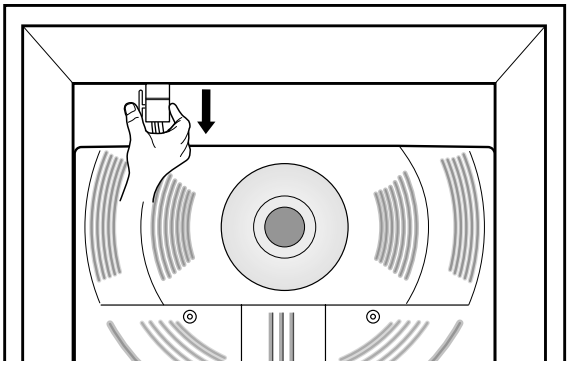

■Ductwork of the evaporator fan assembly.

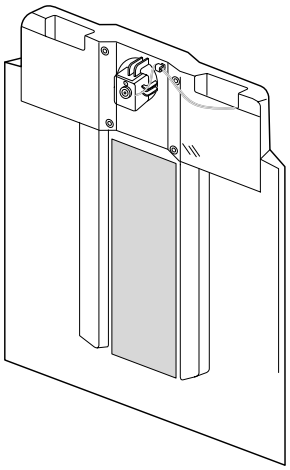

Mechanical Disassembly

Evaporator Cover in Freezer

1. Remove all drawers from the freezer.

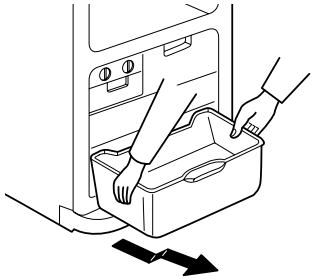

2. Remove screws (2) from the support rail.

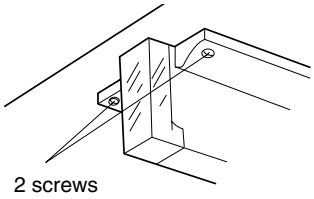

3. Pull down the holder of the support rail and disconnect the wire connector to remove it.

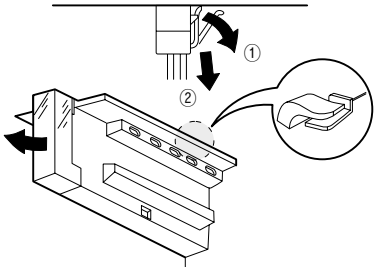

4. Unlock the tabs around the evaporator cover from the buttom.

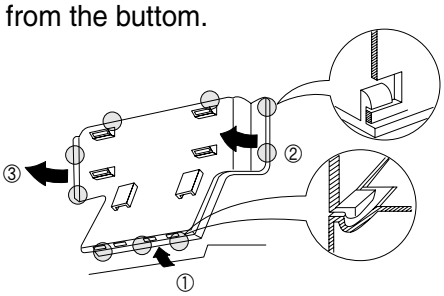

5. Disconnect wire connector from the top-left corner.

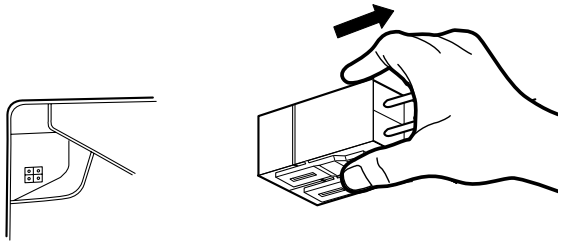

6. Remove 2 screws from the rear cover of the freezer evaporator and unlock the tabs to remove it.

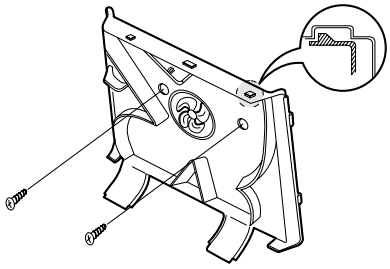

Mechanical Disassembly

Evaporator in Fridge

Evaporator is located in the bottom of fridge.

1. Take off the ductwork in fridge.
2. Disconnect the wire connector.(Heater and Thermistor)
3. Desolder the capillary tube and the suction line from the evaporator.
4. Remove the evaporator.
5. With a file, score the capillary tube just upstream of the soldered point. Break off the soldered section to help prevent solder from plugging the tube during soldering.
6. Place a new evaporator and braze the suction and capillary tube to evaporator using silver solder.
7. Install a replacement dryer.
8. Evacuate and recharge the system using reasonable procedures.

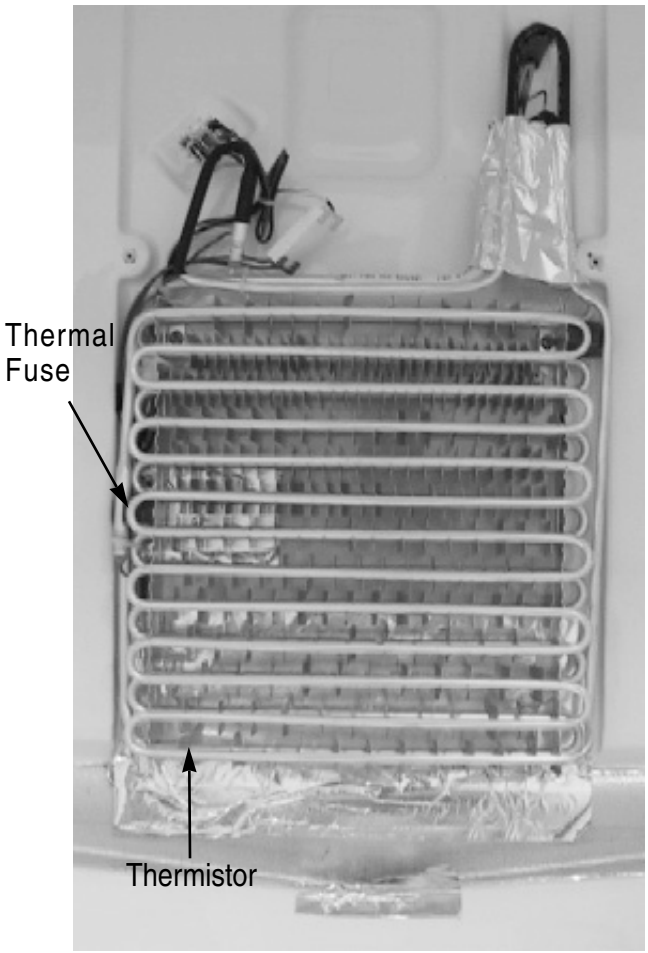

Evaporator in Freezer

Evaporator is located in the bottom of freezer to produce cold air driven across the evaporator coils.

1. Take off the ductwork in Freezer.
2. Disconnect the wire connector (Heater, Bimental, and Thermistor).
3. Desolder the inlet and outlet tubes.
4. Remove the evaporator.
5. Take the same steps to seal the system as mentioned earlier.

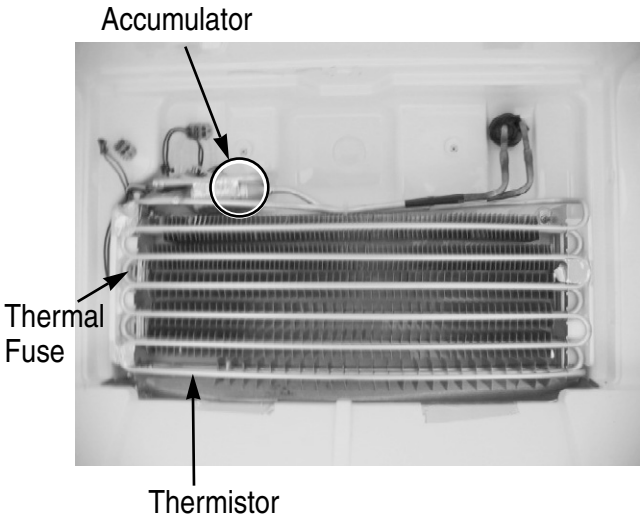

1. Unplug the power cord.

8. REVERSING THE DOOR SWING Read these instructions completely and carefully

- IMPORTANT NOTES

Warning

Unplug the fridge from its electrical outlet.
Empty all door guards / racks.

1. If you want to change the door direction, call 1-800-SAMSUNG.
2. Read the instructions carefully before starting.
3. Handle parts carefully to avoid scratching paint.
4. Set screws down by their related parts to avoid using them in the wrong places.
5. Provide a non-scratching work surface for the doors. (ex : blanket)
6. During door reversing, fridge should not be stained with oil.

- TOOLS YOU WILL NEED

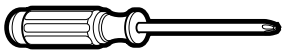

screwdriver

10 inch wrench

- ADDITIONAL PARTS

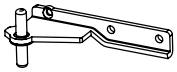

Hinge Mid

Screw

- DISASSEMBLY THE FRIDGE DOOR

1. After removing the screw, disassemble the Upper Right Cover Hinge.

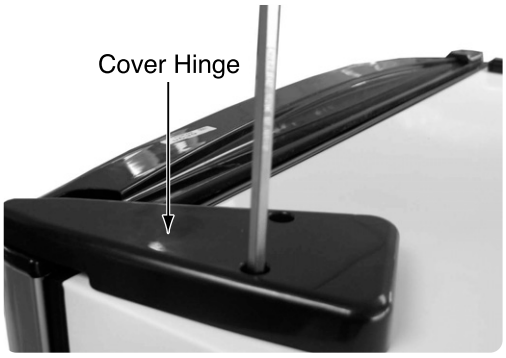

2. Disconnect electric wire on the top of the fridge.

3. With the 10 inch wrench, remove the four bolts that hold the top of the fridge.

4. Apart Hinge from electric wire as below picture.

5. Disassemble the fridge door by lifting it upward. Be careful not to drop and scratch the fridge door.

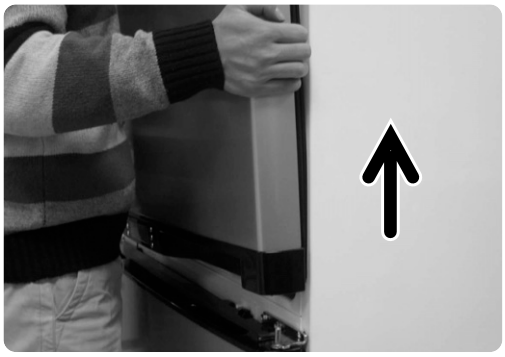

- DISASSEMBLY OF FREEZER DOOR

6. After removing the screw and two bolts, disassemble Hinge Mid.

7. Disassemble the Freezer Door by lifting it upward. Be careful not to drop and scratch the Freezer door.

- ASSEMBLY OF FREEZER DOOR

8. After removing the screw, disassemble the Cover Hinge(left) and the Hinge(right).

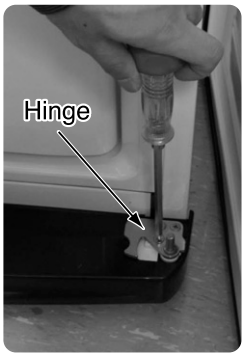

9. Move the hardware found on the right side of the cabinet to the left and vice-versa.

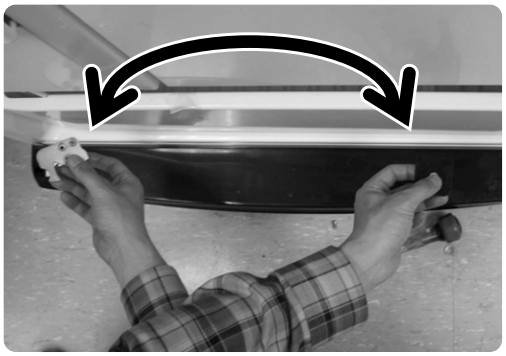

10. After removing the left and right side screws, disassemble the Grommet, Stopper Door and Stopper-Mid of the right bottom of freezer-door.

11. Move the hardware found on the right side of the door to the left and vice-versa.

12. Disassemble the Door S/W with tools. Be careful not to scratch.

13. Disassemble the Cap Door S/W, Sleeve and the screws.

14. Re-install parts in their opposing sides. Assemble the Door S/W as it is. (Make sure not to insert it upside down)

15. Assemble Freezer Door by fitting the lower hinge into the hinge grommet hole. Don't forget to insert washer with grease.

16. Fix the additional Hinge mid into the door hole.

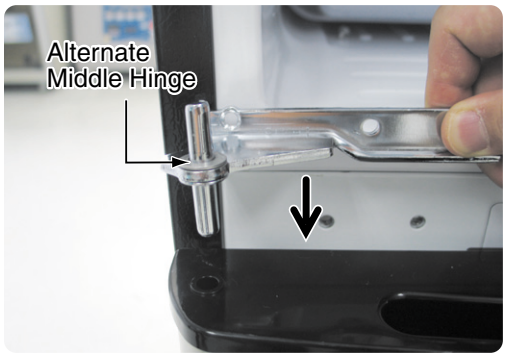

17. Reinstall the middle hinge on the left side of the cabinet. (Use the alternative hinge supplied) Don't forget to insert washer with grease.

18. Confirm opening and closing of the door.

- ASSEMBLY OF FRIDGE DOOR

19. After removing the screws, disassemble the Stopper Door and Grommet.

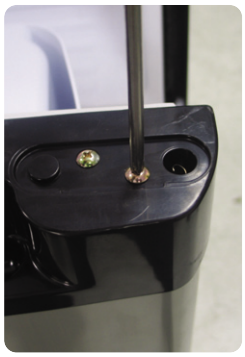

20. Move the hardware from left side of door to the right side and vice-versa.

21. Fit the fridge door into the middle hinge.

22. After removing the screw, dissemble the Cover-Cap Door and Cover Hinge.

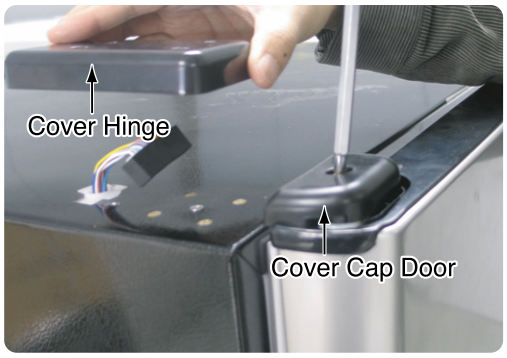

23. Place the Grommet and Cap wire taken from the left connector on the right connector.

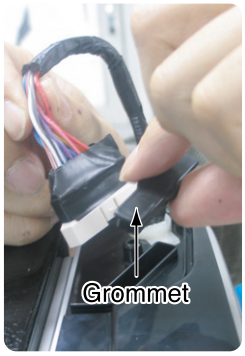

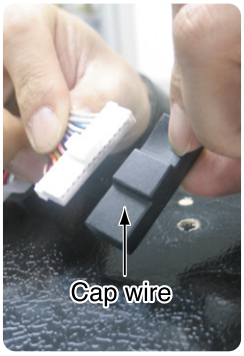

24. Re-install parts in their opposing sides. Electric wires must be sealed in covers.

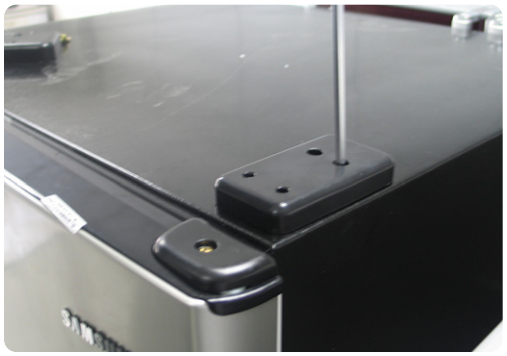

25. After securing the top hinge with the screws, connect the electric wire.

26. Assemble the Cover Hinge with the screws.

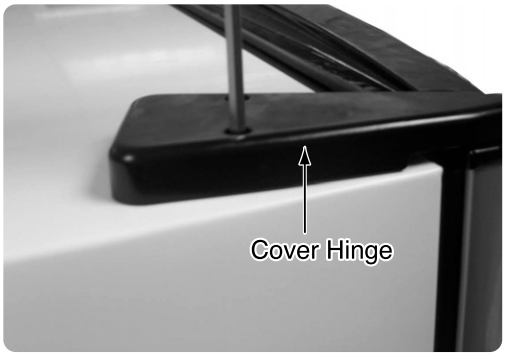

27. Finally, confirm opening and closing of the fridge door.

28. Make any necessary adjustments to insure proper sealing of the doors.

9. Temp Control &Operation Functions

9-1) DISPLAY DESIGN 24

9-2) Temp Control Function 24

9-3) Super Freeze Function and Super Cool Functions 25

9-4) Child Lock Function 27

9-5) Alarm Off Function 27

9-6) Buzzer Alarm Function 28

9-7) Machine Compartment F-Fan Motor Delay Function 28

9-8) Defrost Function 29

9-9) Test Function 29

9-10) Function when the power is applied for the first time. 30

9-11) Power Compensation Function 31

9-12) Self Diagnosis Function 31

9-13) Power Compensation Function 34

9-14) Option Setting Function (EEPROM) 35

9-15) Option Table 37

Temp Control &Operation Functions

9-1) DISPLAY DESIGN

9-2) Temp Control Function

1) Freezer Temperature Control

※ When the Freezer button is pressed,the current set temp will be displayed.And, when the button is pressed again within 5 seconds,it will carry out the following 1-2)and when there is no button press,it will go back to the previous display.

1-1) The temperature will be selected between -14℃ and -25℃ at an interval of 1℃ by pressing one button.

1-2) The temperature will be selected in the following order.
(-19℃→-20℃→-21℃→-22℃→-23℃→-24℃→-25℃→-14℃→-15℃→-16℃→-17℃→-18℃)

1-3) When power is on or there is a power failure,it will display the real temperature.
(It displays the real temperature when a function button is pressed)

1-4) The STD temperature for each step is as follows.(Based on 1/3H copper bar)

Step	1	2	3	4	5	6	7	8	9	10	11	12
Temp	-14℃	-15℃	-16℃	-17℃	-18℃	-19℃	-20℃	-21℃	-22℃	-23℃	-24℃	-25℃

1-5) When the Freezer button is pressed,7-SEG will be changed immediately.But, its function will go into operation in 10 seconds.

2) Fridge Temperature Control

2-1) The temperature will be selected between 7℃ and 10℃ at an interval of 1℃ by pressing one button.
2-2) When the Fridge button is pressed, the current set temp will be displayed.And, when the button is pressed again within 5 seconds, it will carry out the following 2 -3) and when there is no button press for 10 seconds, it will display the finally selected temperature.
2-3) The temperature will be selected in the following order.
(3℃→2℃→1℃→7℃→6℃→5℃→4℃)
2-4) When power is on or there is a power failure,it will display the real temperature.
(It displays the real temperature when a function button is pressed)
2-5) The STD temperature for each step is as follows.(Based on 1/3H copper bar)

Step	1	2	3	4	5	6	7
Temp	7℃	6℃	5℃	4℃	3℃	2℃	1℃

2-6) When the Fridge button is pressed, 7-SEG will be changed immediately. But, its function will go into operation in 10 seconds.

9-3) Super Freeze Function and Super Cool Functions

1) Super Freeze Function

1-1) It is selected by pressing the Super Freeze button.
1-2) When the Super Freeze button is pressed once,Super Freeze will be turned on.And then, it will repeat Off and On each time you press the button after the above
1-3) With the initial Power On,the LED is off. (When the F-Room temperature is over (5℃)

Category	Initial Power On	Pressed Once	Pressed Again	Other
Display Change	OFF	Super Freeze	OFF	

A. When it goes into Super Freeze with the Super Freeze button pressed, the LED will be changed immediately. But, its function will go into operation in 10 seconds.
(Comp and Fan will operate continuously for 2 and a half hours.)
B. When Super Freeze is selected,it goes into operation regardless of the compartment temperature.
C. During the operation of Super Freeze,the fridge compartment will be controlled according to the Fridge Notch setting.
D. The Freezer display will show the real temperature.

2) Super Cool Function

2-1) It is selected by pressing the Super Cool button.
2-2) When the Super Cool button is pressed once, Super Cool will be turned on. And then, it will repeat Off and On each time you press the button.
2-3) With the initial Power On, the LED is off. (When the F-Room temperature is over (5 ℃)

Category	Initial Power On	Pressed Once	Pressed Again	Other
Display Change	OFF	Super Cool	OFF	

A. When it goes into Super Cool with the Super Cool button pressed, the LED will be changed immediately. But, its function will go into operation in 10 seconds.
(Comp and Fan will operate continuously until it reaches to -2℃.)
B. Comp and R-Fan will operate continuously until it reaches to -2℃. But, the operation time will not exceed 2 and a half hours.
C. During the operation of Super Cool, the freezer compartment will be controlled according to the Freezer Notch setting.

※ Super Freeze and Super Cool Functions
Each function will go into operation independently. With Super Freeze, Comp and F-Fan will operate continuously for 2 and a half hours regardless of the Fridge compartment and with Super Cool, Comp and R-Fan will operate continuously until the Fridge compartment reaches to -2℃.

Note

When Super Freezer or Super Cool is selected with the Freezer temperature over -10℃. and the Fridge temperature over 10℃,it will operate differently. But, it is not a normal case.So, the explanation will be skipped.

9-4) Child Lock Function

1) Child Lock Function

It operates with the Child Lock button pressed for 3 seconds.

1-1) When the Child Lock is selected,the Child Lock LED will light up.Press the button one more time to cancel its function. When the Child Lock is selected,all of the function buttons do not operate.
So, temperature control ,Super and Alarm Off functions will keep their current settings.It is devised to prevent children from changing the settings.

1-2) When the Child Lock button is pressed,the Child Lock LED will be turned on, and when its function is cancelled, the Child Lock LED will go off and other buttons will work.
- Select the function if necessary. But, keep it in mind that this function can bring up consumer calls. So, have a better understanding of it.

9-5) Alarm Off Function

1) Alarm Off Function

- Set the Alarm off key to light on the Alarm off Icon. Press the Key again to cancel it.
  Set the Alarm off to cancel the door alarm function. Alarm would not sound even in the case of door opening.
- The Alarm off is On when setting the Alarm off Key, while the alarm off icon is off when canceling the alarm off function, the Door Alarm function works normally

9-6) Buzzer Alarm Function

1) Button Touch Tone ("DING-DONG")
1-1) When each button on the control panel is pressed,it will send out an input signaling "DING-DONG"sound.
1-2) When buttons are not pressed correctly,it won't send out the "DING-DONG"sound.
1-3) Buttons are recognized within 0.2 sec and when buttons are pressed continuously, it sends out only a "DING"sound.
1-4) This Button Touch sound has priority over other alarm sounds.

2) Door-Open Alarm Sound
2-1) With either of the doors open for more than 2 minutes continuously, it sends out a “ Ding Dong” sound.
2-2) When the door keeps being opened, it will send out the "DING-DONG"sound every minute.
2-3) The alarm sound will stop immediately when both of the doors are closed.

3) Alarm Sound for Forced Operation &Forced Defrost ("BEEP" Sound)
3-1) When Forced Operation or Forced Defrost is selected, it will send out a "BEEP"sound.
3-2) When the Forced Operation button is pressed once,the "BEEP"sound (0.25Sec ON/0.75Sec OFF) will keep on until it is cancelled automatically (24 Hr)or forcefully.
3-3) During Forced Operation, it will send out a "BEEP"sound until the Defrost is completed (idling time included)or the cancellation is selected.)
3-4) With Forced R-Defrost,it will send out a "BEEP"sound (0.1sec ON/0.75sec OFF)and with Forced F/R-Defrost,it will send out a "BEEP"sound (0.5sec ON/0.5sec OFF).

9-7) Machine Compartment F-Fan Motor Delay Function

1) The fridge is automatically controlled by temperature control programs according to the ambient temperature. The machine compartment fan is controlled as follows according to the ambient temperature. The fan does operate or does not operate according to operating conditions with Comp on. So, make sure to take it into consideration during service.

	Temp Range	Load Operation Status
Machine Compartment Fan Delay Function	Ambient Temp 22℃ or over	Machine Compartment Fan On with Comp On
	Ambient Temp 17℃~21℃	Machine Compartment Fan On in 3 minutes after Comp On
	Ambient Temp 12℃~16℃	Machine Compartment Fan On in 6 minutes after Comp On
	Ambient Temp 7℃~11℃	Machine Compartment Fan On in 9 minutes after Comp On
	Ambient Temp 6℃ or under	Machine Compartment Fan Off regardless of Comp

9-8) Defrost Function

1) The F/R-Room defrost depends on the accumulated comp-on time.
2) With the initial power on,defrost starts at the both rooms after 4 hour accumulated comp-on time.
3) The defrost cycle can be changed from Min 6 hours to Max 7 hours according to various conditions.
4) The defrost cycle depends on the ambient temperature,the frequency of F/R-Door open and the duration of the F/R-Door open.
5) The Defrost Heater Off temperatures are compared using the temperature values of R-Defrost Sensor and F-Defrost Sensor and they are as follows.

	R-Room	F-Room	E t c
Defrost Start	Lower than 10℃	Lower than -5℃	
Defrost Restoration Temp	17℃	14℃	

Note

Defrost restoration temperatures could be changed without notice for the purpose of performance improvements.

9-9) Test Function

- This function is for PCB,Product and Process Test, and SVC.
- After checking the product functions by selecting Test S/W,turn on the power again.

1) Forced Operation Function

Display for Forced Operation

Display for Forced Operation and How to Turn it On
① (Press for 8 seconds simultaneously) +
② All LEDs Off, Press one of the following buttons (Super Freeze, Super Cool,Freezer, Fridge Key)

1-1) When the Super Cool button and the Fridge button on the display panel are pressed for 8 seconds simultaneously,the display panel will be shifted to the Test Setting Mode and all the LEDs will be off.
1-2) When any of Super Freeze,Super Cool,Freezer and Fridge buttons is pressed within 15 seconds with the display panel shifted to the Test Setting Mode, it will be selected in the order of Forced Operation → Forced R-Defrost → Forced F/R-Defrost → Cancel.
1-3) When there is no button press within 15 seconds after the display panel is shifted to the Test Setting Mode,it will go back to the previous display mode.
1-4) When the Test Setting Mode is selected or cancelled,it will send out a "BEEP"sound.
1-5) When Forced Operation is selected,the F-Room LED will display "FF"and the R-Room LED will display its real compartment temperature.
But, when it passes more than a minute with Forced Operation selected,and then Forced Defrost or Test Cancellation is selected,the temperature setting will not be changed (maintaining -25℃ and -1℃)
When Forced Defrost or Test Cancellation is selected within a minute after Forced Operation is selected,the Notch will go back to the previous notch setting.
1-6) During Forced Operation,the Full-Down function will be maintained only for 24 hour s.Af t er t hat, it will go in to normal operation after carrying out F/R-Defrost automatically.

1-7) To cancel Forced Operation,turn off and on the power or select the Test Cancellation Mode.
1-8) It will send out an alarm sound (0.25sec ON/0.75sec OFF)during Forced Operation until it is completed. It will keep on alarming regardless of the selection or cancellation of the alarm button.
1-9) When Forced Operation is selected, Super Freeze and Super Cool won't operate.

2) Forced Defrost Function

2-1) When the Test button is pressed one more time during Forced Operation, it will go into R-Room Forced Defrost.

Display for Forced R-Defrost
-. Press one of Super Freeze, Super Cool, Freezer, Fridge buttons once during Forced Operation

2-2) When it is selected once more, it will go into F/R-Defrost.

Display for Forced F/R-Defrost

Display for Forced F/R-Defrost
-.Press one of Super Freeze, Super Cool,Freezer,Fridge buttons once during Forced R-Defrost Operation

2-3) When it goes into Forced Defrost,Forced Operation will be cancelled automatically. And then, it will carry out normal operation after completing Forced Defrost.

3) Test Cancellation Mode
3-1) When the Test button is pressed once more during F/R-Forced Defrost, it will go back to normal operation.
3-2) When the Test Cancellation Mode is selected, it will stop alarming.

9-10) Function when the power is applied for the first time.

1) When power is applied,it will carry out the initial self diagnosis. And, if there is no error, all the LEDs on the display panel will light up for 2 seconds.
2) When there is any error found during the initial self diagnosis,relevant LEDs will blink at an interval of 0.5 sec.
3) After lighting up all the LEDs for 2 seconds,the display panel will display the real temperatures of the F−Room and the R−Room.
4) It will turn on R−Defrost Heater and F−Defrost Heater at an interval of 0.5 sec and keep them being turned on for 3 seconds.
5) When the initial F/R−Defrost is completed,COMP, C−FAN,F−FAN and R−FAN will be on at an interval of 0.5 sec and they will operate for 5 minutes regardless of the compartment temperatures.
6) When the Test S/W is pressed during 4)and 5),the functions related to 4)and 5)will stop immediately and it will go into the Test function.

9-11) Power Compensation Function

1) Notch Save Function

1-1) Whenever the Super Freeze, Super Cool, Fridge or Freezer button is pressed, it will save the current display setting. And, when the power goes off and comes back on, it will display the stored setting. (But, the Test Mode will not be saved.)

1-2) Upon the initial power on,the above 1-1)will be performed when the F-Room temperature is lower than 5℃and it will operate on the initial mode regardless of the saved setting when the temperature is over 5℃.

1-3) When the power goes off during Super Freeze and comes back on, it will carry out Super Freeze when the F-Room temperature is lower than 5℃. But, the previously accumulated operating time will be reset and it will count from the start.

1-4) When the power goes off during Super Cool and comes back on, it will carry out Super Cool when the F-Room temperature is lower than 5℃. But, the previously accumulated operating time will be reset and it will count from the start.

1-5) When the power is off with various functions in operation, it will light up the entire display for about 3 seconds from the power-on point regardless of the notch save if the F-Room temperature is lower than 5℃.

※ Exhibition Mode

- When the Super Freeze and the Freezer buttons are pressed for 5 seconds simultaneously, it will go into the Exhibition Mode with a “Ding-Dong” sound.
- With the Exhibition Mode selected, the compressor will be off immediately and there will be no defrost.
- Press the Super Freeze and the Freezer buttons for 5 seconds simultaneously to cancel the Exhibition Mode. Then, it will carry out the normal operation.

9-12) Self Diagnosis Function

1) Self-diagnosis with initial power on

1-1) With power on, MICOM checks the temperature sensors for errors in a second.

1-2) If inferior sensor is found by self-diagnosis, relevant display LEDs will be all on and off at the interval of 0.5 sec. (There will be no beep sound with at this time.)

1-3) When display LEDs are blinking with inferior sensors found, it only recognizes the self-diagnosis buttons and normal temp control will be on hold.

1-4) Upon self-diagnosis error, when the faulty sensor is repaired or when the Super Freeze button and the Super Cool button are pressed for 5 sec simultaneously, the initial self diagnosis will be canceled automatically. (Below, How to Select)

2) Self-diagnosis with initial power on

2-1) When pressing the Super Freeze button and the Super Cool button simultaneously for 6 sec during normal operation, the entire temperature setting display will blink for 2 sec at the interval of 0.5 sec and when pressing the Super Cool button and the Super Cool button simultaneously for 8 sec including 2 sec blinking, self-diagnosis will be selected.

2-2) It goes into the Self Diagnosis function with a “Ding-Dong” sound and it shows error codes on the LED display.And then,it will be restored to the normal operation.

2-3) During self-diagnosis,button inputs will not be recognized but only the canceling buttons.

- Self Diagnosis Check List

No	Error	LED Display	Description	Others
1	F-SENSOR ERROR		Fault rated F-SENSOR?	
2	R-SENSOR ERROR		Fault rated R-SENSOR?	
3	F-DEFROST SENSOR ERROR		Fault rated F-DEFROST SENSOR?	
4	R-DEFROST SENSOR ERROR		Fault rated R-DEFROST SENSOR?	
5	AMBIENT SENSOR ERROR		Fault rated AMBIENT SENSOR?	
6	F-DEFROST HEATER ERROR		Fault rated F-DEFROST?	
7	R-DEFROST HEATER ERROR		Fault rated R-DEFROST?	
8	UART TELECOM ERROR		Fault SENSOR?	

Temp Control &Operation Functions

- Descriptions for each Self Diagnosis Lamp

No	Item	Error	Self Diagnosis
1	F-SENSOR	SENSOR HOUSING SLIP-OUT, CONTACT DEFECT,WIRE CUT, WIRE SHORT, SENSOR TEMP MORE THAN +65℃ OR LOWER THAN -50℃	VOLTAGE BETWEEN MAIN PCB CN30 2↔3 SHALL BE WITHIN 4.5V~1.0V.
2	R-SENSOR	SENSOR HOUSING SLIP-OUT, CONTACT DEFECT, WIRE CUT, WIRE SHORT, SENSOR TEMP MORE THAN +65℃ OR LOWER THAN -50℃	VOLTAGE BETWEEN MAIN PCB CN30 6↔7 SHALL BE WITHIN 4.5V~1.0V.
3	F-DEFROST SENSOR	SENSOR HOUSING SLIP-OUT, CONTACT DEFECT, WIRE CUT, WIRE SHORT, SENSOR TEMP MORE THAN +65℃ OR LOWER THAN -50℃	VOLTAGE BETWEEN MAIN PCB CN30 2↔4 SHALL BE WITHIN 4.5V~1.0V.
4	R-DEFROST SENSOR	SENSOR HOUSING SLIP-OUT, CONTACT DEFECT, WIRE CUT, WIRE SHORT, SENSOR TEMP MORE THAN +65℃ OR LOWER THAN -50℃	VOLTAGE BETWEEN MAIN PCB CN30 6↔8 SHALL BE WITHIN 4.5V~1.0V.
5	AMBIENT SENSOR	SENSOR HOUSING SLIP-OUT, CONTACT DEFECT, WIRE CUT, WIRE SHORT, SENSOR TEMP MORE THAN +65℃ OR LOWER THAN -50℃	VOLTAGE BETWEEN MAIN PCB CN31 1↔4 SHALL BE WITHIN 4.5V~1.0V.
6	F-DEFROST ERROR	F-ROOM HEATER (SENSOR HOUSING SLIP-OUT, CONTACT DEFECT, WIRE CUT, WIRE SHORT OR TEMP FUSE DEFECT) WHEN DEFROST DOES NOT FINISH EVEN AFTER A 70-MINUTE CONTINUOUS HEATING, IT DISPLAYS THE ERROR.	AFTER SEPARATING THE MAIN PCB CN70 WIRE FROM PCB, CHECK THE RESISTANCE BETWEEN BROWN ↔ ORANGE. IT SHALL BE WITHIN ***OHM. (THE RESISTANCE VARIES ACCORDING TO THE INPUT POWER.) WHEN THE RESISTANCE IS 0 OHM,CHECK IF THE HEATER IS SHORT AND WHEN IT IS ∞OHM, CHECK IF THE WIRE/TEMP FUSE IS OPEN
7	R-DEFROST ERROR	R-ROOM HEATER (SENSOR HOUSING SLIP-OUT, CONTACT DEFECT, WIRE CUT, WIRE SHORT OR TEMP FUSE DEFECT) WHEN DEFROST DOES NOT FINISH EVEN AFTER A 80-MINUTE CONTINUOUS HEATING, IT DISPLAYS THE ERROR.	AFTER SEPARATING THE MAIN PCB CN70 WIRE FROM PCB,CHECK THE RESISTANCE BETWEEN WHITE ↔ ORANGE.IT SHALL BE WITHIN ***OHM. (THE RESISTANCE VARIES ACCORDING TO THE INPUT POWER.) WHEN THE RESISTANCE IS 0 OHM,CHECK IF THE HEATER IS SHORT AND WHEN IT IS ∞OHM,CHECK IF THE WIRE/TEMP FUSE IS OPEN
8	U-ART TELECOM ERROR	LED IS DISPLAYED WITH THE SENSOR ERROR SIMULTANEOUSLY	IF SENSOR ERROR IS REPAIRED, LED IS RECOVERED PROMPTLY

9-13) Power Compensation Function

It is the initial Sensor Error Display. Hold on the Super Freeze and the Super Cool buttons for 3 seconds and take off the fingers. Then, press the Fridge button.

1) During the normal operation,when the Super Freeze and the Super Cool buttons are pressed for 3 seconds at the same time, the Freezer and the Fridge temp LEDs will blink for 2 seconds at the interval of 0.5 second.
2) At this time, when pressing the Fridge button (“Ding-Dong “ goes off)after taking off the fingers from the Super Freeze and the Super Cool buttons, it will be changed to the Load Status Display Mode.
3) The Load Status Display Mode only shows the status of the load operation command from MICOM. MICOM sends out command signals. So, it does not mean the related components are in operation. For example, even though it shows that a load is operating,it is not operating due to the load defect or the PCB relay defect.It can be applied to A/S.
4) The Load Status Display function maintains for 30 seconds and it goes back to the normal operation.

- Self Diagnosis Check List

LOAD	DISPLAY	OTHERS
R-FAN	R-Room second digit "a"	
R-DEFROST HEATER	R-Room second digit "c"	
COMPRESSOR	F-Room second digit "a"	
F-FAN	F-Room second digit "b"	
F-DEFROST HEATER	F-Room second digit "d"	
INITIAL START MODE	R-Room second digit "d"	
OVERLOAD MODE	R-Room second digit "e"	
LOW TEMP MODE	R-Room second digit "f"	
R-LAMP	F-Room first digit "b"	
F-LAMP	F-Room first digit "a"	
EXIHIBITION MODE	R-Room second digit "g"	

9-14) Option Setting Function (EEPROM)

- During the normal operation,when the Super Cool and the Freezer buttons are pressed for 12 seconds,the Fridge or Freezer temp setting display will be shifted to the Option Setting Mode.

How to Control Option Mode Shift Button by Model

When the Super Cool and the Freezer buttons are pressed for 12 seconds at the same time, the Fridge/Freezer display will be shifted to the Option Setting Mode.

How to Control Button after shifting into Option Mode

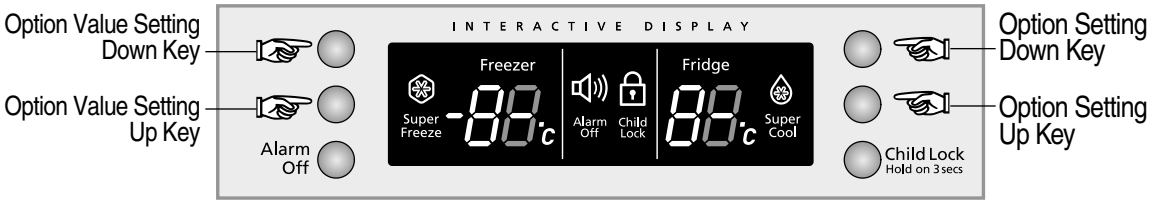

※ Button Press at Option Mode

Press Super Freeze	Option Value Down (Decrease)
Press Freezer	Option Value Up (Increase)
Press Super Cool	Option Moving Down
Press Fridge	Option Moving Up

- When the display is shifted to the Option Setting Mode, all the LEDs will be turned off except Freezer and Fridge. (All the options operate according to the Option Table. So, only Fridge and Freezer will be introduced.)

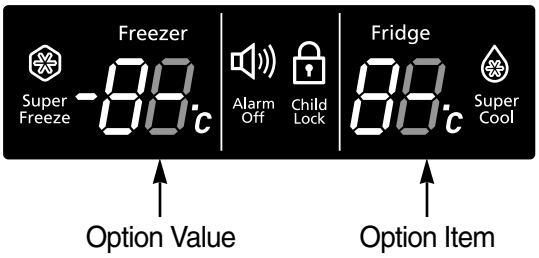

1) For example,if you want to change option and shift the standard temp of R-Room to -2℃,follow the directions below. This function is to change the standard temp and if the current standard temp of F-Room is -19℃, it can be lowered by -2℃using the options and the standard temp will be controlled at -21℃. That is, in the case of changing temp options, although you set it to -19℃ on the display panel, the fridge will operate to -21℃ internally. Therefore, the temp will be controlled by lowering -2℃ compared to that set on the display panel.

Temp Control &Operation Functions

Note

Basically,when sending out products,their option will be all cleared. That is,their set values are all **“0”**. However, for the purpose of quality improvement, set values could be changed. Therefore, make sure to check quality information

2) After changing to the Option Mode,the display panel will blink "0"(ALL OFF)for R-Room and "0"(ALL OFF)for F-Room. (When sending out products, there shall be "0"set for R-Room and "0"set for F-Room. But,for the purpose of quality improvement,the standard set values can be changed.)
   - If only "0"for R-Room blinks,F-Room temp option item will be set and the current F-Room temp set value will be shown on the temp display of F-Room.
3) After setting "0"for R-Room and selecting "6"as in the option table of F-Room below, the standard temp of F-Room will be lowered by -2.0℃. (Refer to F-Room temp change figure)

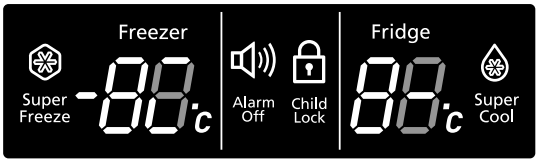

Option Value Option Item

: In 20 seconds after the completion of the adjustment,MICOM will store the set value in EEPROM and it will be restored to the normal display and the option setting mode will be cancelled.

4) The above option setting method is the same for all models whether they have Ice Maker or not.
5) With the same as the above method,R-Room Temp,Defrost Restoration Temp, Hysteresis & Notch Gap for each temperature can be controlled.
6) Since option is already set in EEPROM while sending out products at the factory, do not change it randomly except for special occasions and do not turn off pow
l display in 20 seconds.

Note

There are other options including the functions mentioned above. But, they are related to the fridge controlling.They are dropped here since they are not relevant to A/S.
(Do not set other options except for those in this A/S manual.)

9-15) Option Table

1) F-Room Temp Shift Table

Set Item	F-Room Temp Shift
Model	Common (All Models)
Option Item	Fridge LED
	0

Set Value Freezer LED	Option Value
0	0
1	-0.5℃
2	-1.0℃
3	-1.5℃
4	-2.0℃
5	-2.5℃
6	-3.0℃
7	-3.5℃
8	+0.5℃
9	+1.0℃
10	+1.5℃
11	+2.0℃
12	+2.5℃
13	+3.0℃
14	+3.5℃
15	+4.0℃

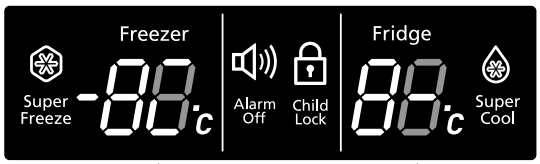

Option Value

Option Item

Ex) When raising the Freezer standard temperature by (-2℃)

2) R-Room Temp Shift Table

Set Item	R-Room Temp Shift
Model	Common (All Models)
Option Item	Fridge LED
	1

Set Value Fridge LED	Option Value
0	0
1	-0.5℃
2	-1.0℃
3	-1.5℃
4	-2.0℃
5	-2.5℃
6	-3.0℃
7	-3.5℃
8	+0.5℃
9	+1.0℃
10	+1.5℃
11	+2.0℃
12	+2.5℃
13	+3.0℃
14	+3.5℃
15	+4.0℃

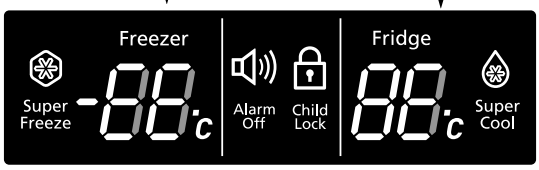

Option Value

Option Item

Ex) When raising the fridge standard temperature by +2℃

10. OPERATION PRINCIPLES BY PARTS OF CIRCUIT

10-1) SOURCE POWER CIRCUIT · 40

10-2) OSCILLATION CIRCUIT · 40

10-3) RESET CIRCUIT · 41

10-4) EEPROM DETECTION CIRCUIT · 41

10-5) DOOR SWITCH DETECTON CIRCUIT · 41

10-6) TEMP SENSING CIRCUIT · 42

10-8) DISPLAY DRIVING CIRCUIT · 43

10-9) LOAD DRIVING CIRCUIT · 44

10-10) BUZZER CIRCUIT DIAGRAM · 45

OPERATION PRINCIPLES BY PARTS OF CIRCUIT

10-1) SOURCE POWER CIRCUIT

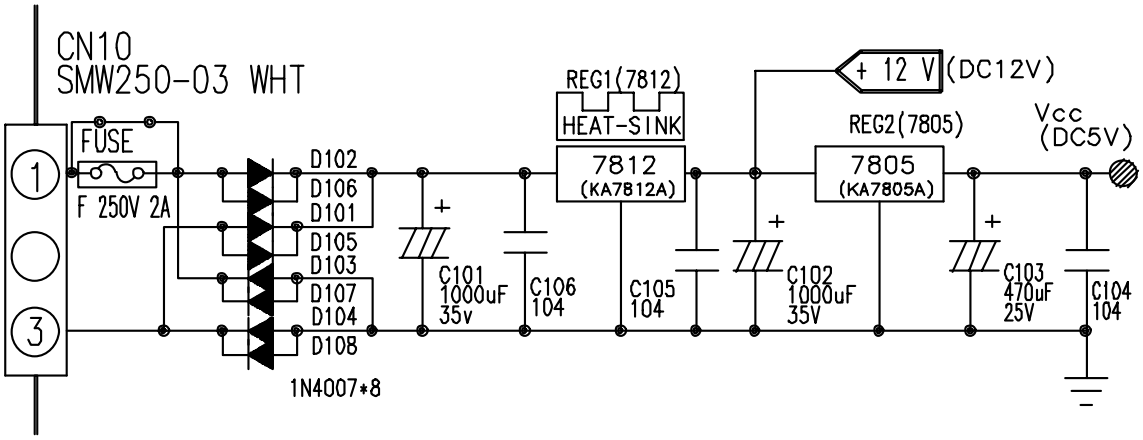

Power	Circuit
Vcc(DC 5V)	MICOM POWER AND SENSORS
+12 +12V(DC 12V)	RELAY,PANEL DRIVING CIRCUIT

1) When the power is supplied,AC voltage stepped down on the 2nd transformer flows between ①and ③at about AC 16V and changes to DC voltage when it goes through the diode D101~ D108, and constant 12V will be output via regulator REG1(7812). And,it will supply DC5V to MICOM and power to other circuits via regulator REG2 (MC7805A),and make entire PCB operate.

10-2) OSCILLATION CIRCUIT

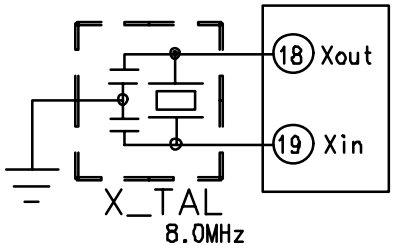

Terminal	Oscillation Freq.
Xin(#19)	8MHz
Xout(#18)	8MHz

1) It is an Oscillation Circuit for synchronism clock generation and time calculation on the information sending &receiving of the MICOM internal logic elements and when specifications for Resonator change,the timing system of MICOM changes resulting in errors. (Rated parts must be used)

10-3) RESET CIRCUIT

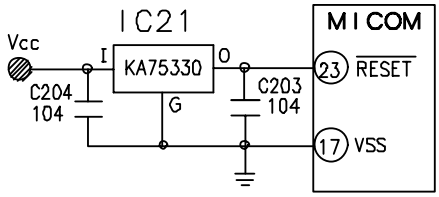

Terminal	Power
Vcc	DC 5V
Reset	DC 5V

1) RESET Circuit allows the whole program to go back to the initial setting by initializing parts such as the RAM in MICOM with the power supply into MICOM or with an instant power failure.
Upon the power supply,the reset terminal voltage becomes "LOW" for several tens of ㎲ compared to Vcc voltage(DC 5V)at MICOM,and it maintains "HIGH"(Vcc Voltage)during normal operation.
But, when Vcc drops down to 3.4~3.7V, the reset terminal voltage becomes "LOW".

10-4) EEPROM DETECTION CIRCUIT

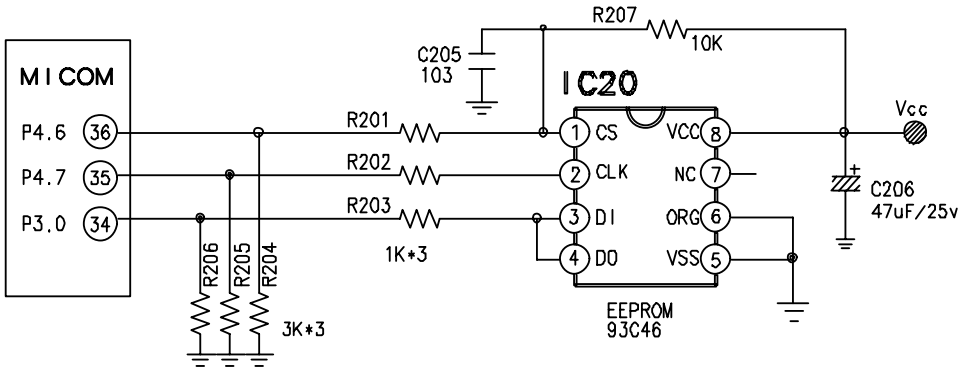

1) A semiconductor memory EEPROM stores data remembering previous settings regardless of power-off,which are indispensable especially in power fluctuating areas.Also,EEPROM sets and uses other options in principle.

10-5) DOOR SWITCH DETECTON CIRCUIT

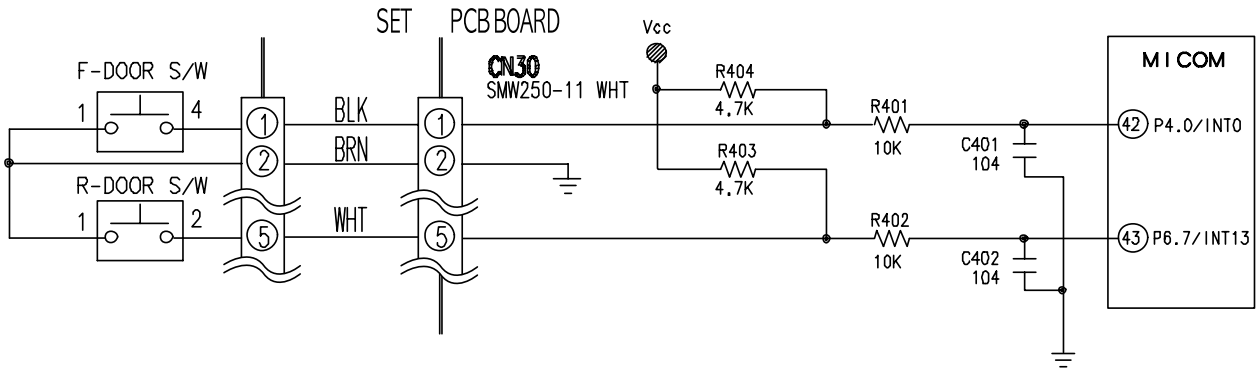

ITEM	DOOR OPEN/CLOSE	DOOR S/W CONTACT POINT	MICOM PIN NO	MICOM INPUT
F	CLOSE	OPEN	# 42	“HIGH”
	OPEN	CLOSE		“LOW”
R	CLOSE	OPEN	# 43	“HIGH”
	OPEN	CLOSE		“LOW”

1) If F-Door is opened,the contact point of the door switch (4-1)becomes closed.Then,the power of the PCB line flows to the door switch through R404 and 0V is applied to the MICOM terminal.And, when the door is closed,the contact point of the door switch (4-1)becomes open.Then,the power of the PCB line supplies 5V to MICOM via R404 and R401,which recognize the door as closed,turn on the fan at the extra load terminal and control the Room Lamp Relay (K73)turning off the lamp.

2) If R-Door is opened,the contact point of the door switch (2-1)becomes closed.Then,the power of the PCB line flows to the door switch through R403 and 0V is applied to the MICOM terminal.And, when the door is closed,the contact point of the door switch (2-1)becomes open.Then,the power of the PCB line supplies 5V to MICOM via R403 and R402,which recognize the door as closed,turn on the fan at the extra load terminal and control the Room Lamp Relay (K75)turning off the lamp.

10-6) TEMP SENSING CIRCUIT

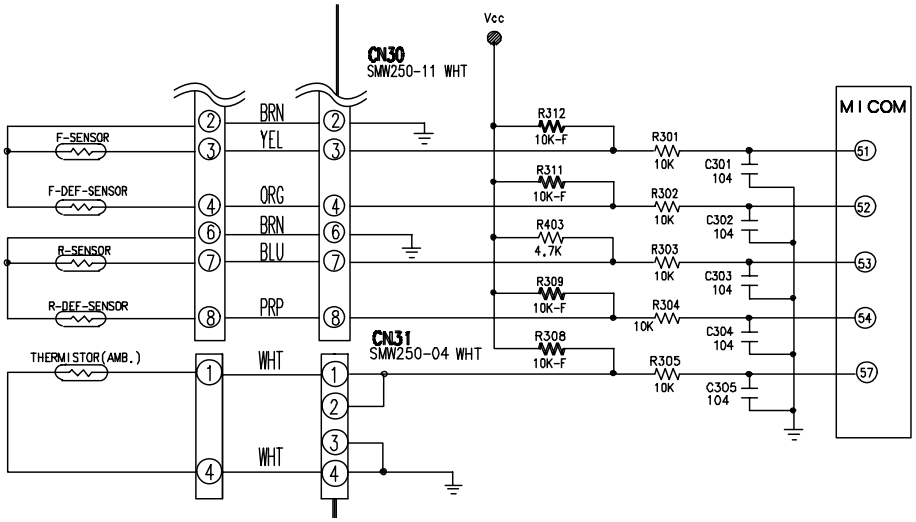

1) Sensor uses a thermistor which has a temp coefficient of negative resistance and controls resistance.When the heat goes up,the resistance gets down and vice versa.R301~R305and C301~C305 are parts for noise prevention but they are not related to temp sensing characteristics.

2) If Vf is the incoming voltage to MICOM in case of F-Sensor,Vf equals (Rth *Vcc)/ (R312 +Rth). Rth is resistance of THERMISTOR corresponding to Temp.Please refer to the Appendix Temp-to-Sensor Resistance/Voltage conversion table(Temp-to-MICOM Terminal Voltage included)on A/S. (89page)

10-8) DISPLAY DRIVING CIRCUIT

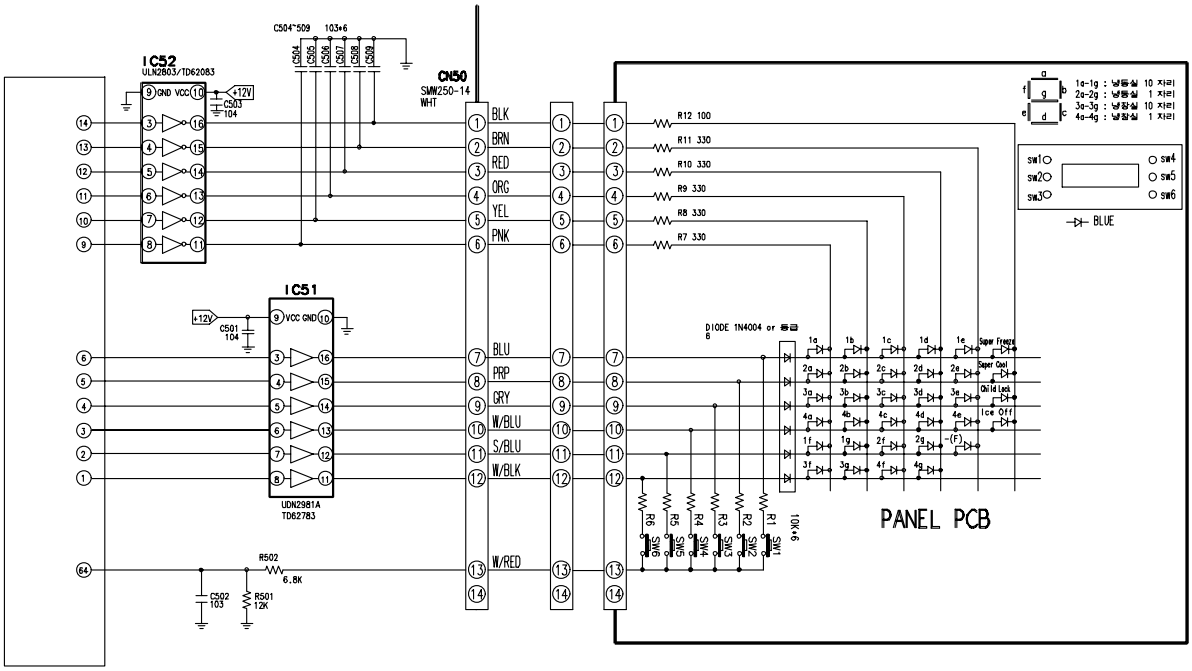

1) KEY SCAN &DISPLAY DRIVING PRINCIPLE

As shown in the wave diagram below,Micom sends out “high ”signals through the MICOM 6 terminals of NO #1→2→3→4→5→6 for 2ms each every 12ms.This signal goes to output terminal via input terminal of IC51 (TD62783AP or KID65783AP). Here, the peak to peak voltage of the square wave is 11~12V DC and each output wave is as follows.

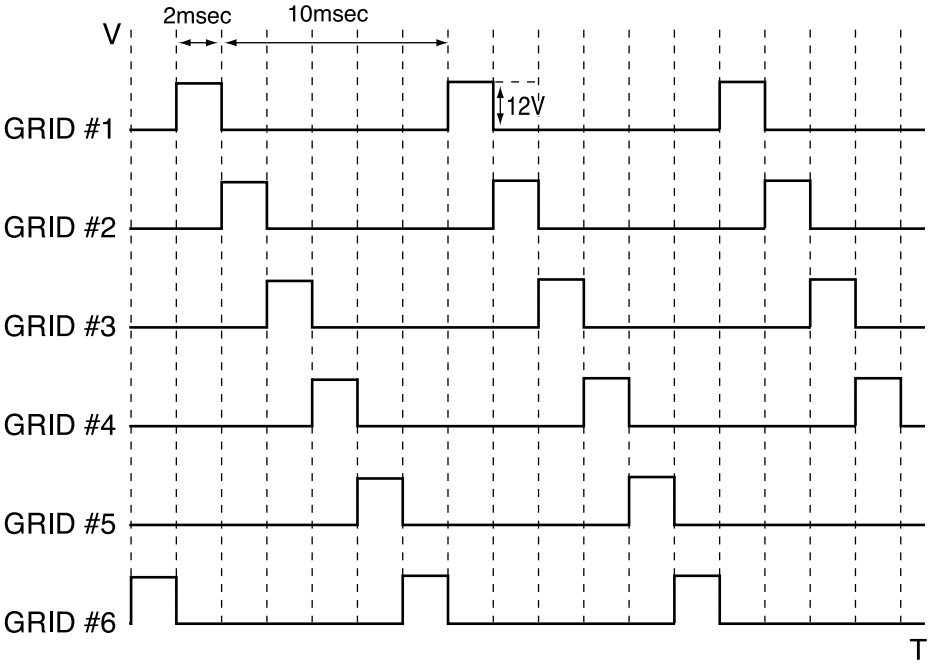

10-9) LOAD DRIVING CIRCUIT

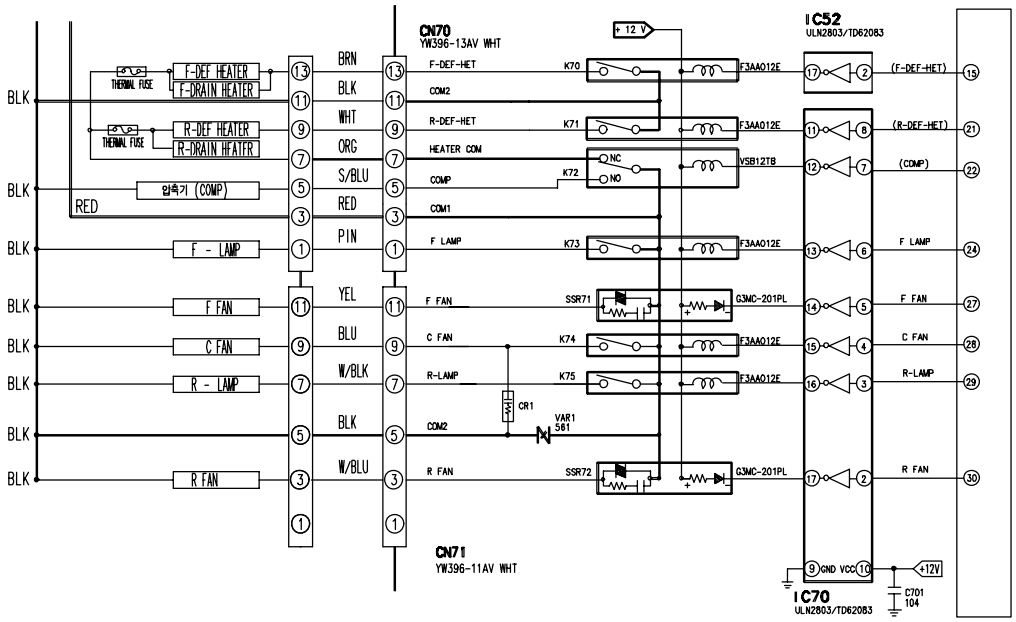

1) The main PCB processes most of the load control for electronic fridges.
2) Compressor,F-Room,defrost heater,and other functions are controlled by relays.
3) For example,to operate the compressor,MICOM Pin #22 outputs high (5V)signals which go into IC70 Pin #7.The IC70 Pin #7 plays the same role as the base of NPN TR.The Pin #12 works as the collector of TR. So,if 5V is supplied to the Pin #7 of IC70,the Pin #12 will be turned on and connected to the ground.Then,the relay K72 and the coil connected to the Pin #12 of IC70 becomes low (OV)and +12V (opposite side of coil)flows to the Pin #12 of IC70 via the coil and goes into the ground.
While current flows to the coil,the magnetic power arise,it turns on the secondary contact point inside K72,and operates when the AC power is supplied to the both sides of the compressor.
When MICOM Pin #22 becomes Low(0V),IC70 Pin #7 becomes Low which cut out the power and the current of K72 RELAY.So,the secondary contact becomes off due to the magnetic field cut,which turns off the compressor.
All other loads work based on the same principle.The defrost heater operates only if the compressor is turned off like the circuit above and it is connected like the equivalent circuit below.

- COMP & DEFROST HEATER EQUIVALENT

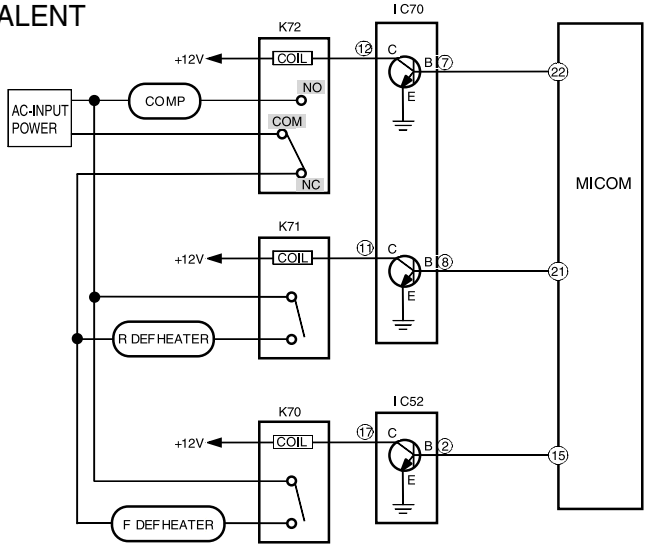

2) R-Room Temp Sensor trouble

ERROR INDICATION

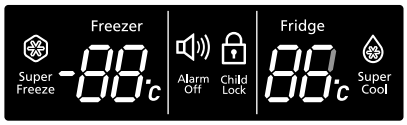

Start

Is R-Room Temp Sensor normal?

NO → Change Temp Sensor

YES

Is the insertion of MAIN PCB connector(CN30) normal?

NO → Connector contact trouble / re-insertion

YES

Is both terminal Voltage of MAIN PCB ⑦~⑥ (BLUE-BROWN) normal?

NO (0.5V>Measured value) → Reconfirm electric wire connect section

Refer to Sensor-voltage table of Temp detection circuit part

YES

Is MICOM Pin#53 input voltage normal? (Identical Voltage ⑦~⑥ of CN30)

NO → Check soldering fault,short, Lead Touch

YES

Change MAIN PCB

3) R-Room Defrost Sensor trouble

ERROR INDICATION

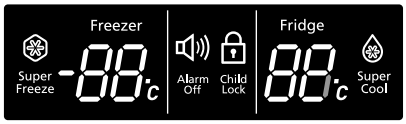

Start

Is R-Room Defrost Sensor normal?

NO → Change Defrost Sensor

YES

Is MAIN PCB (CN30) insertion normal?

NO → Connector contact trouble / re-insertion

YES

Is both terminal Voltage of MAIN PCB Connector CN30 ⑤~⑥ (PURPLE-BROWN) normal?

NO (0.5V>Measured value) → Reconfirm electric wire connect section

Refer to Sensor-voltage table of Temp detection circuit part

YES

Is MICOM Pin#54 input voltage normal? (Identical Voltage ⑤~⑥ of CN30)

NO → Check soldering fault,short, Lead Touch

YES

Change MAIN PCB

4) F-Room Temp Sensor trouble

ERROR INDICATION

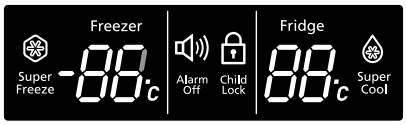

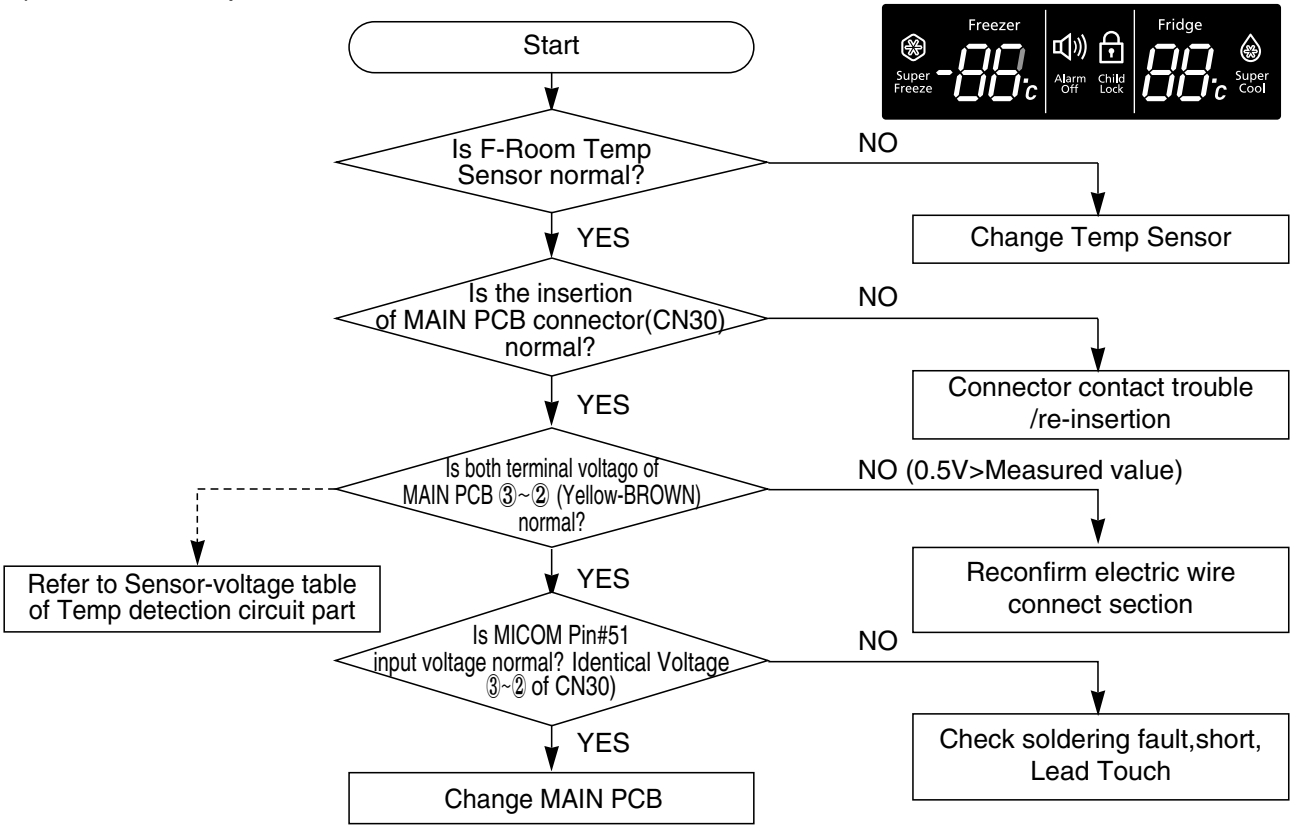

5) F-Room Defrost Sensor trouble

ERROR INDICATION

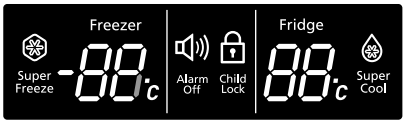

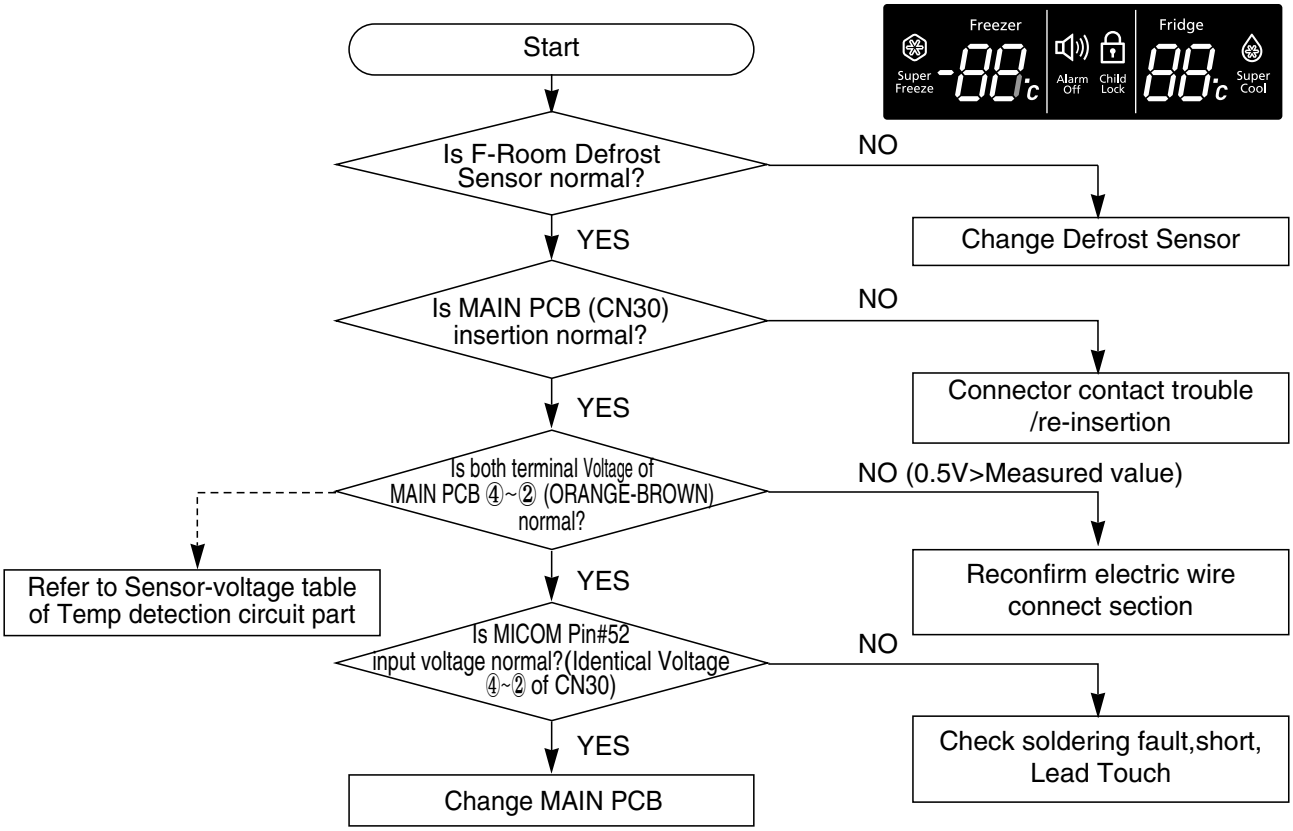

11-3) When COMP does not operate

Pre-Check

"Check out the COMP with the Forced Operation selected"

1. If it does not pass 5 min after a desired Temp reached,COMP does not operate.
2. During Defrost,COMP does not operate.
3. With the disconnected F-Sensor or R-Sensor,COMP does not operate because low temperature is detected.

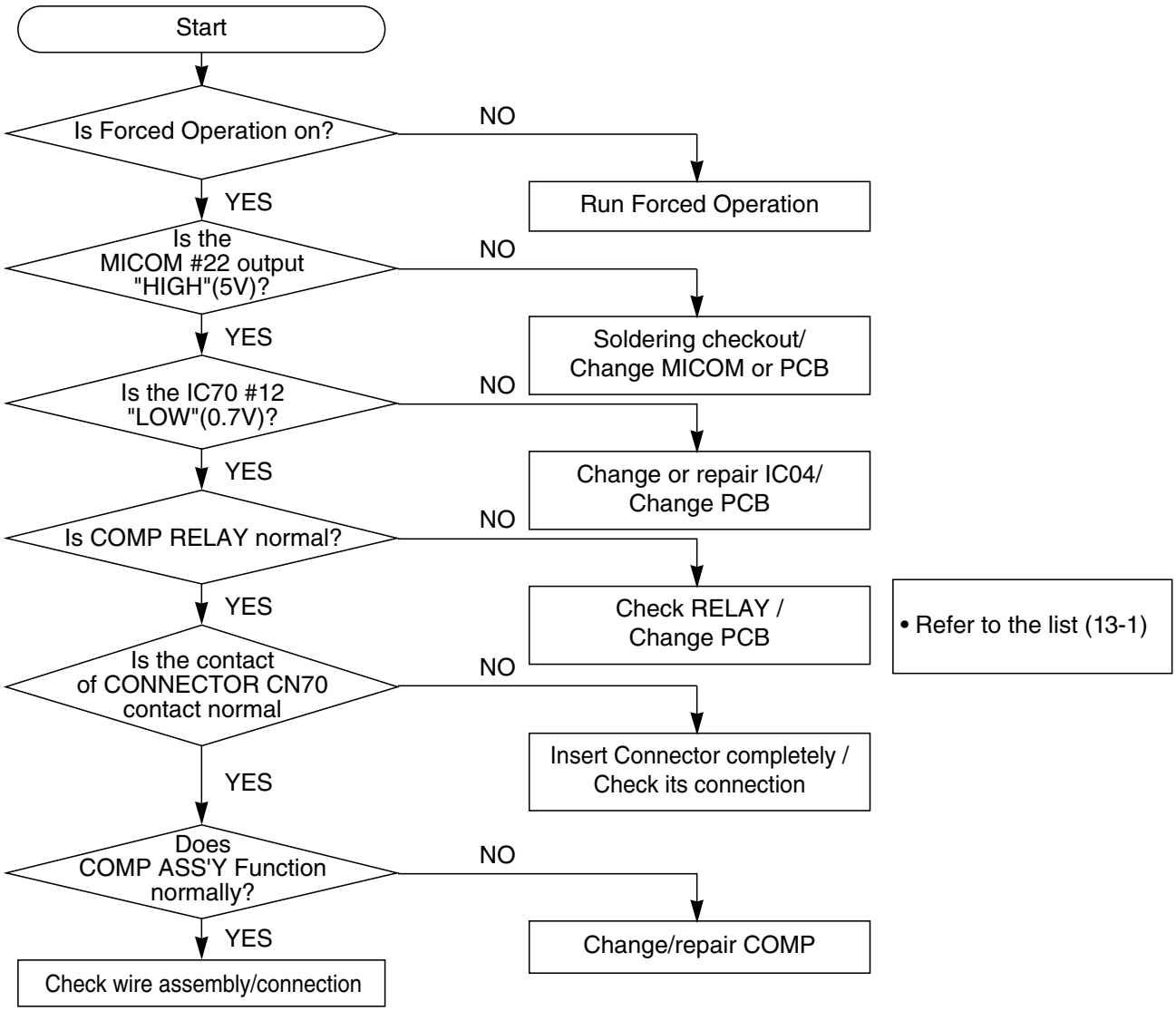

11-4) When FAN does not operate

Note

"Check out the F-FAN with the Forced Operation selected"

1. F-Room FAN, R-Room FAN and COMP COOLING FAN remains OFF while COMP is off. (R-FAN can be on with the defrost function.)
2. When Comp is ON,R-FAN does not always remain ON (including Forced Operaation) and when R-Room temp reaches to set temp,R-FAN remains OFF.
3. When R-Room &F-Room are closed after being opened,each FAN starts up with a delay time (5sec ~1min) immediately.(Comp ON condition)

1) When F-Room FAN(F-FAN)does not operate

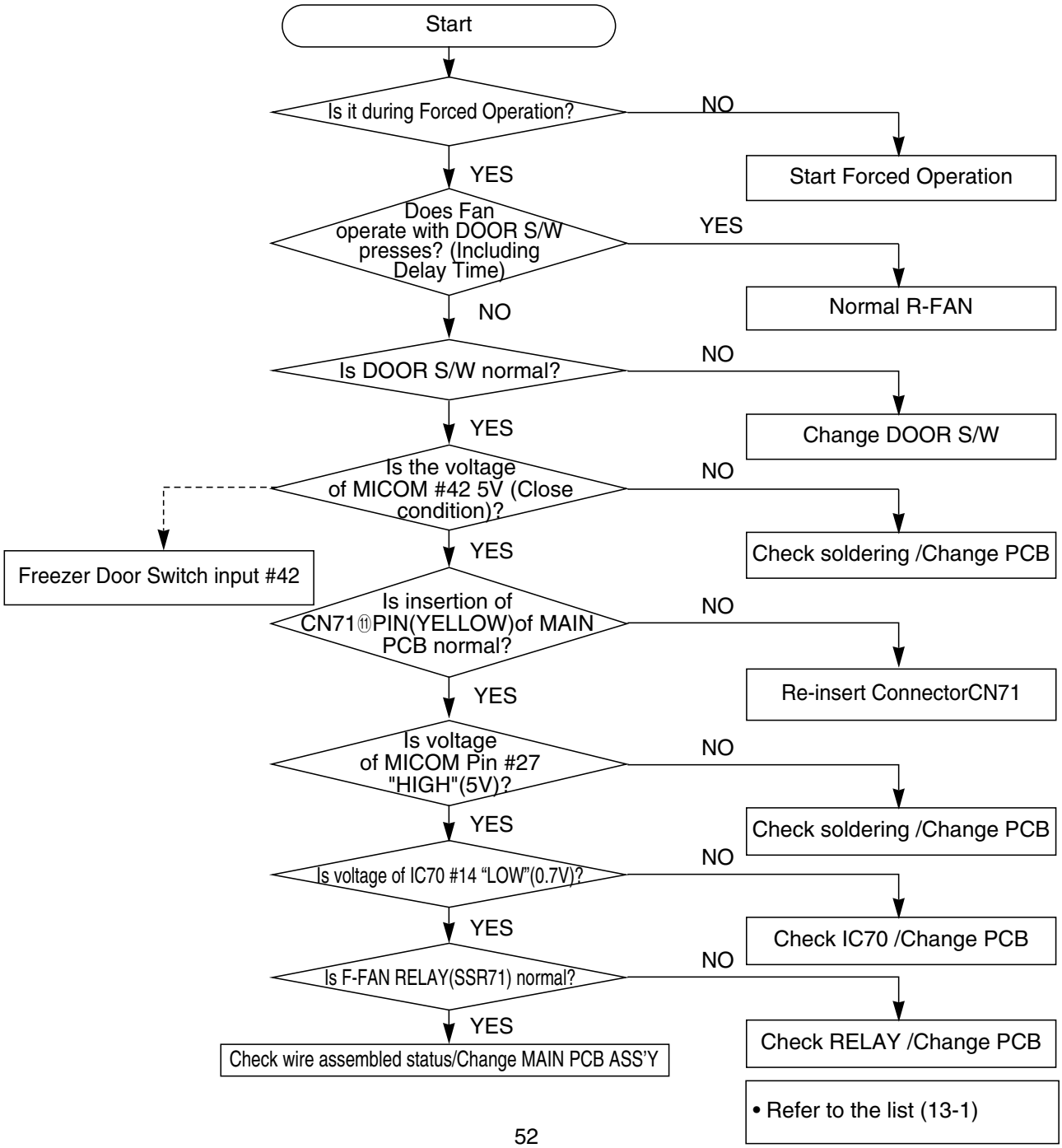

2) When R-Room FAN(R-FAN)does not operate

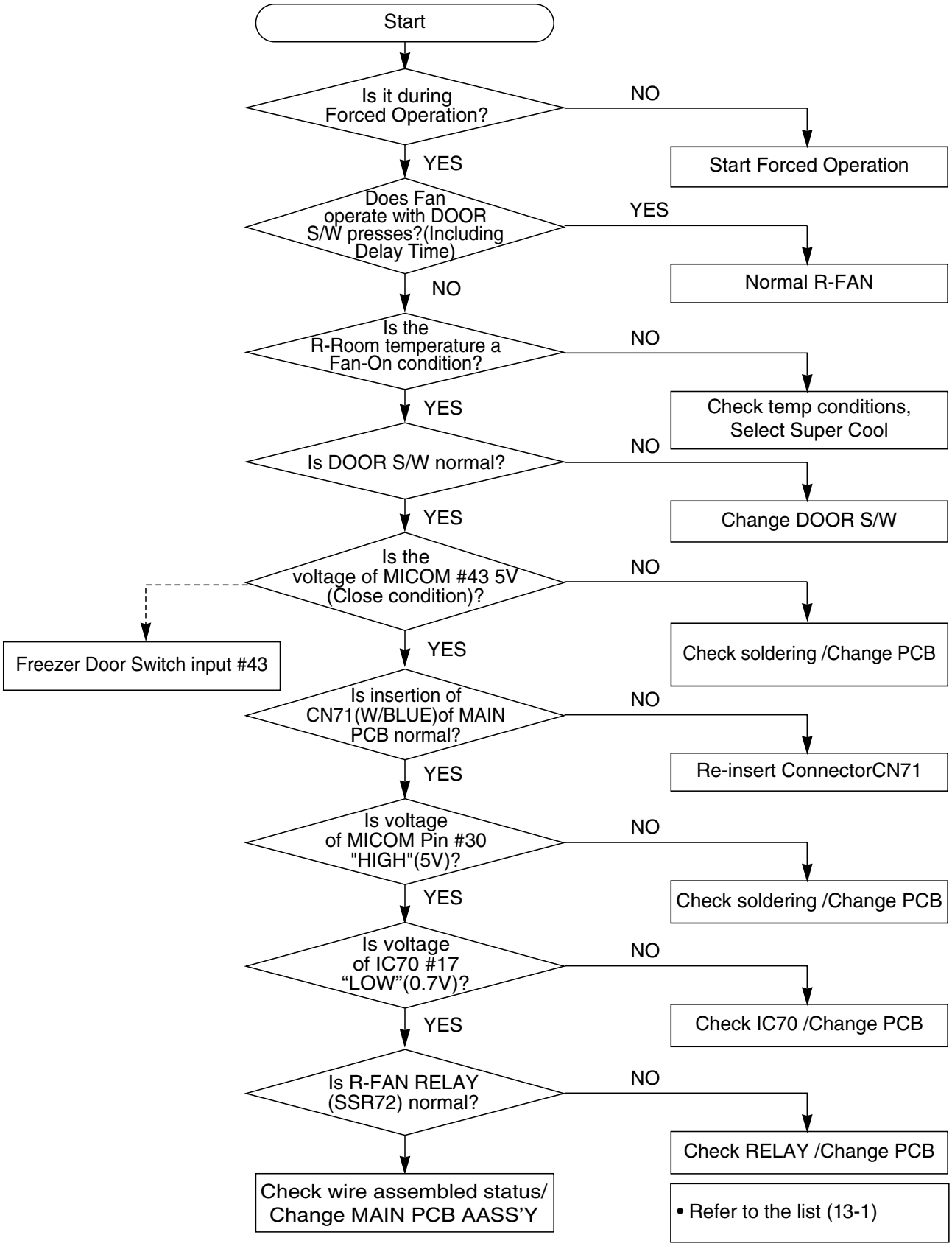

3) When COMP COOLING FAN does not operate

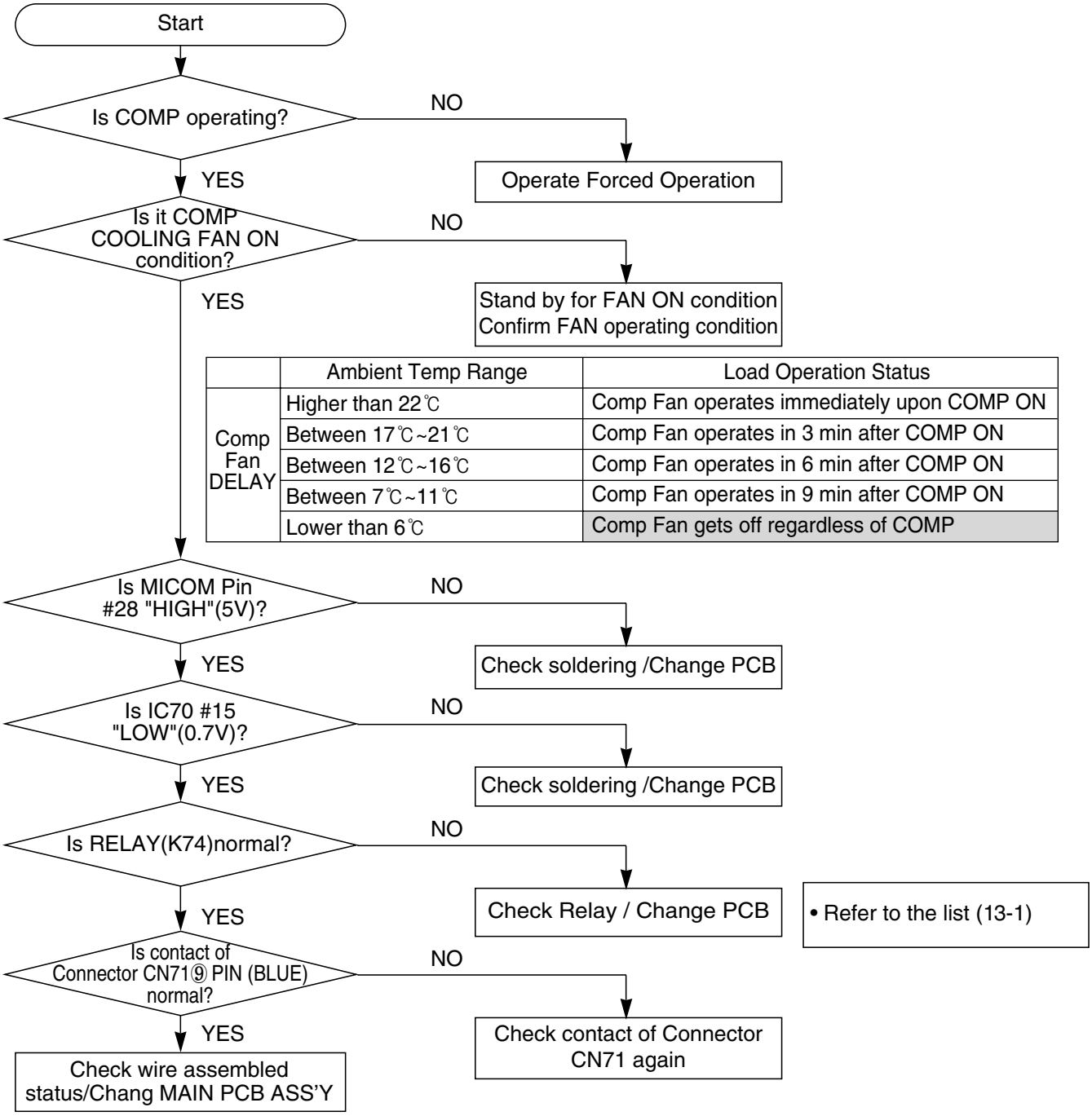

	Ambient Temp Range	Load Operation Status
Comp Fan DELAY	Higher than 22℃	Comp Fan operates immediately upon COMP ON
	Between 17℃~21℃	Comp Fan operates in 3 min after COMP ON
	Between 12℃~16℃	Comp Fan operates in 6 min after COMP ON
	Between 7℃~11℃	Comp Fan operates in 9 min after COMP ON
	Lower than 6℃	Comp Fan gets off regardless of COMP

11-5) When Defrost does not operate

Pre-Check

1. With a shorted-out F or R Defrost Sensor,the fridge operates normally excepting Defrost (The fault can be picked up with self-diagnosis,POWER ON/OFF).
2. There will be Heating trouble with a shorted-out Temp FUSE,which contributes to Defrost by natural Temp increase resulting in a Temp Control problem stemmed from the increased COMP OFF time.
3. When a F or R Defrost Sensor is faulty as OPEN,Heating will not be terminated,and COMP will remain off following the Temp FUSE short-off.(The fault can be picked up with self-diagnosis, POWER ON/OFF)

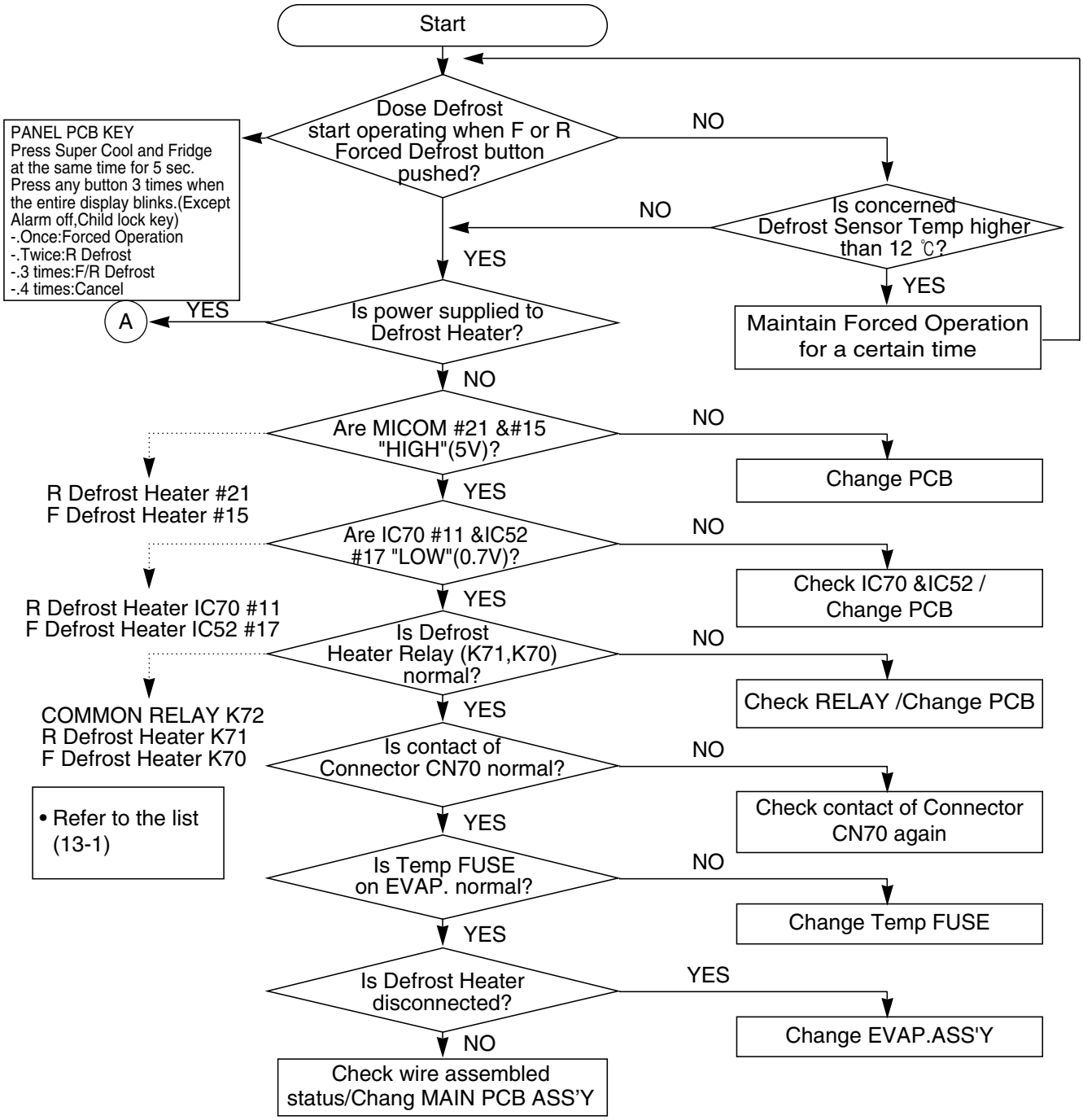

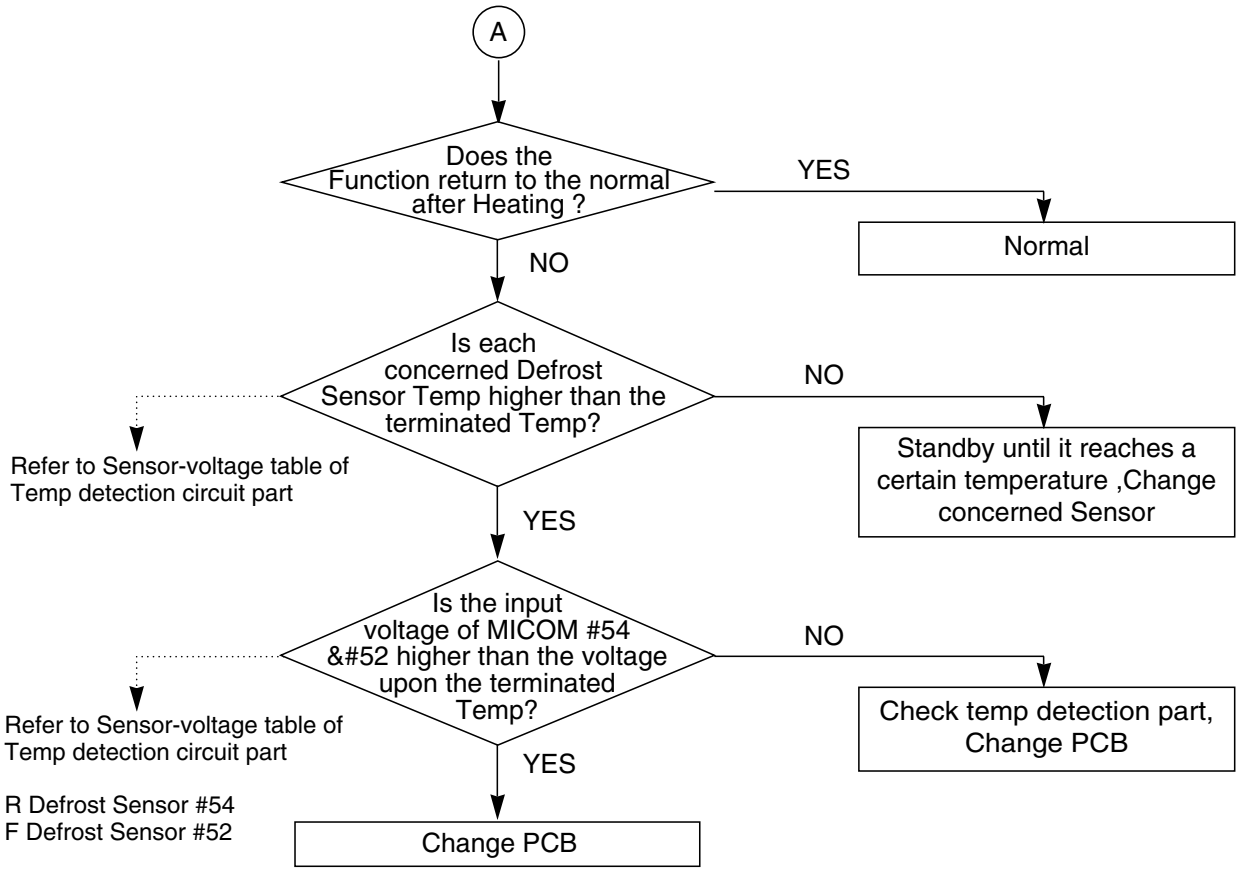
A
Does the Function return to the normal after Heating ?
YES
Normal
NO
Is each concerned Defrost Sensor Temp higher than the terminated Temp?
NO
Standby until it reaches a certain temperature ,Change concerned Sensor
Refer to Sensor-voltage table of Temp detection circuit part
YES
Is the input voltage of MICOM #54 &#52 higher than the voltage upon the terminated Temp?
NO
Check temp detection part, Change PCB
Refer to Sensor-voltage table of Temp detection circuit part
YES
R Defrost Sensor #54
F Defrost Sensor #52
Change PCB

11-6) When Alarm Sound continues without stop

Note

1. When Door gets open,Door Open alarm ("Ding Dong")goes off in 2 minutes with Door opened.When Door remains open after this,the alarm goes off every minute.
2. When Door Switch is not pressed well,MICOM considers it as opened and alarming sound goes off. Room Lamp becomes OFF in 10 minutes since it detects Door Open.In this case, even though Door gets opened, Room Lamp does not comes ON.

1) If melody sounds continuously

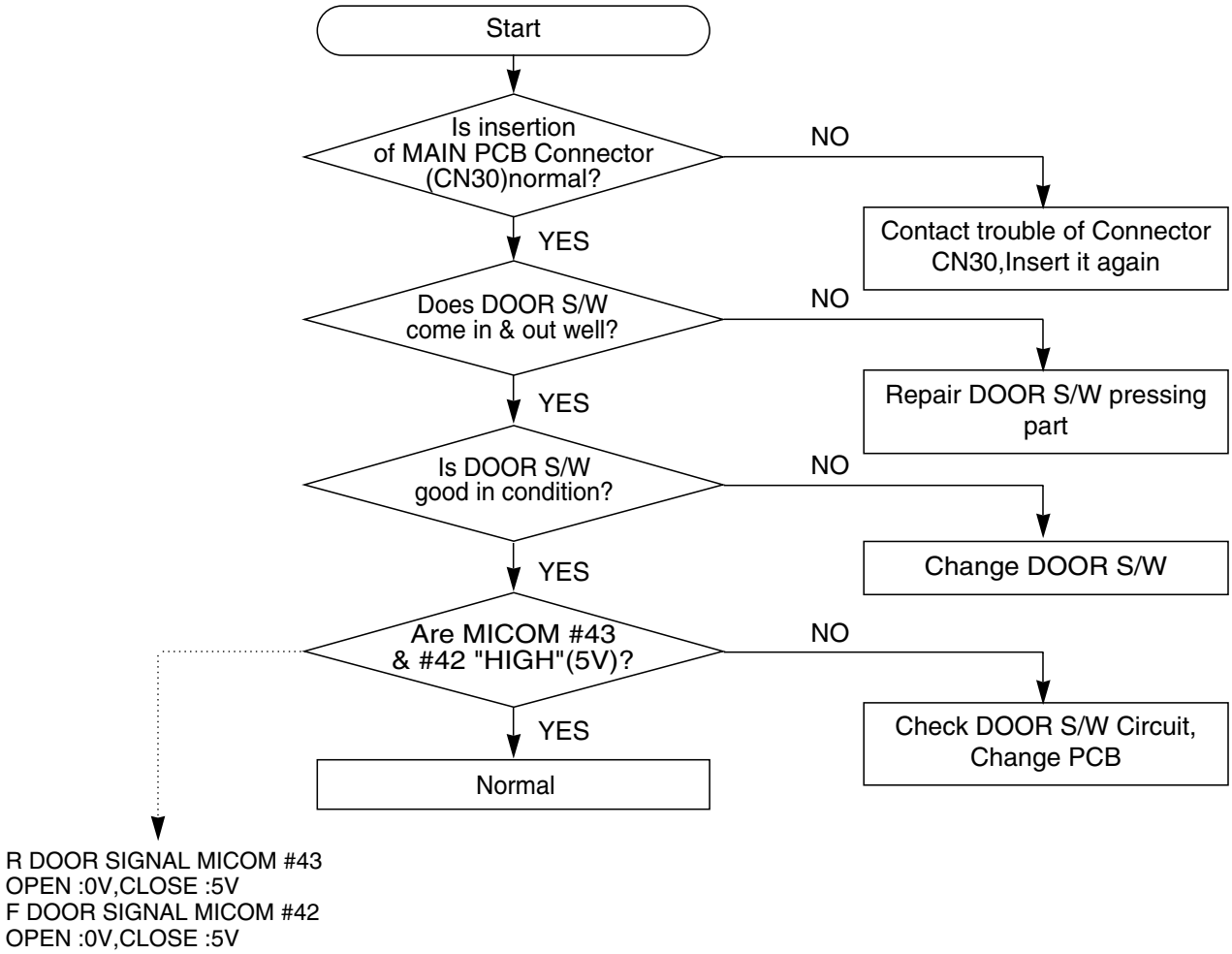

2) When “Beep Beep” sound continues

Note

1. "Beep-Beep"sounds do not go off except Forced Operation &Forced Defrost.
2. It is checkable at Panel PCB when Forced Operation or Forced Defrost is selected,so when error occurs, check it and correct the error.

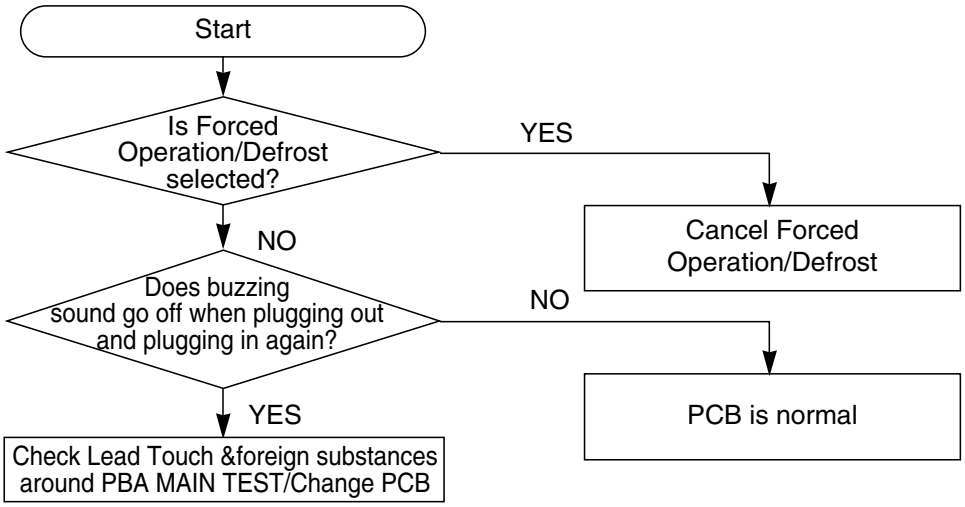

11-7) Panel PCB Defect

1) When PANEL PCB doesn 't light up

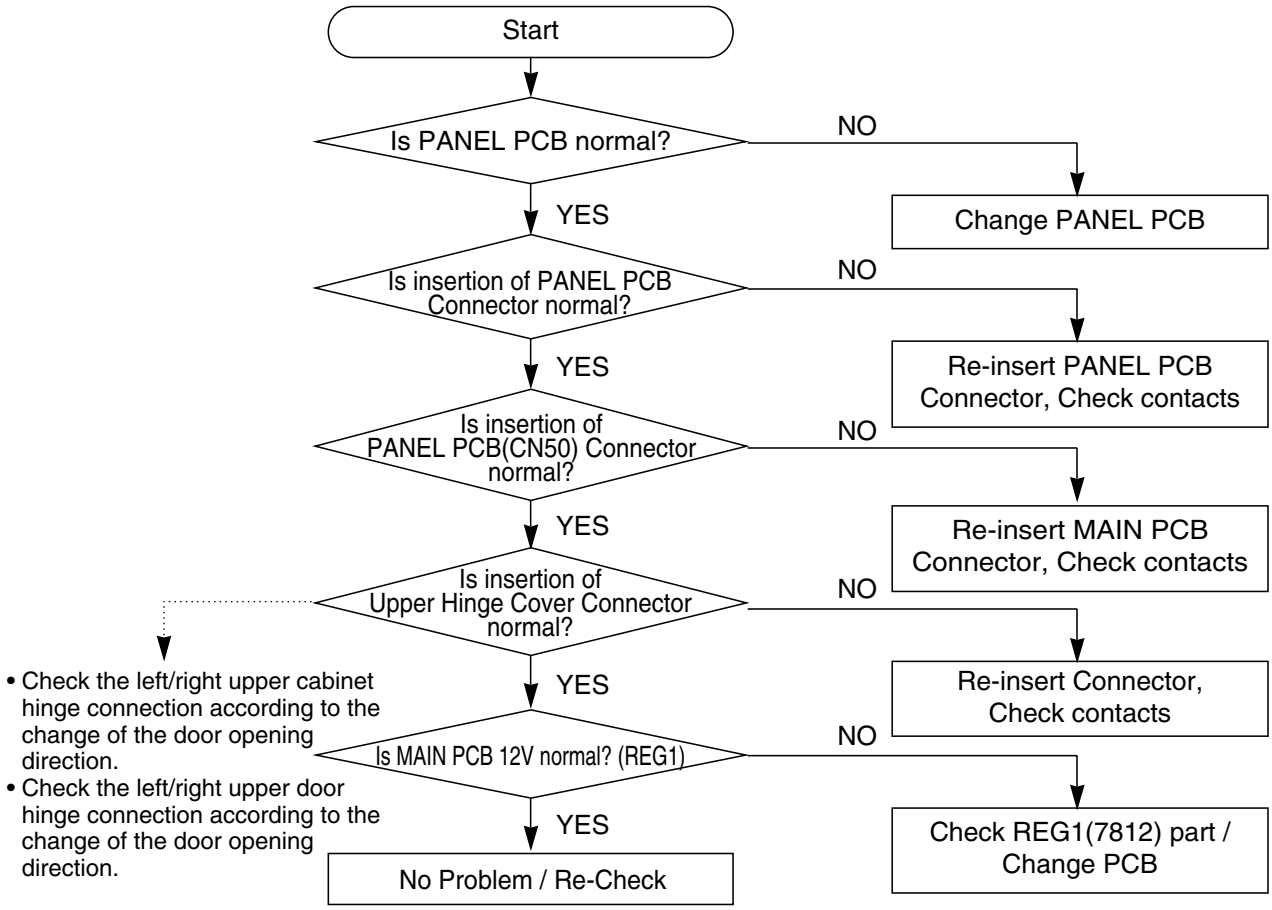

2) When PANEL PCB Buttons do not work

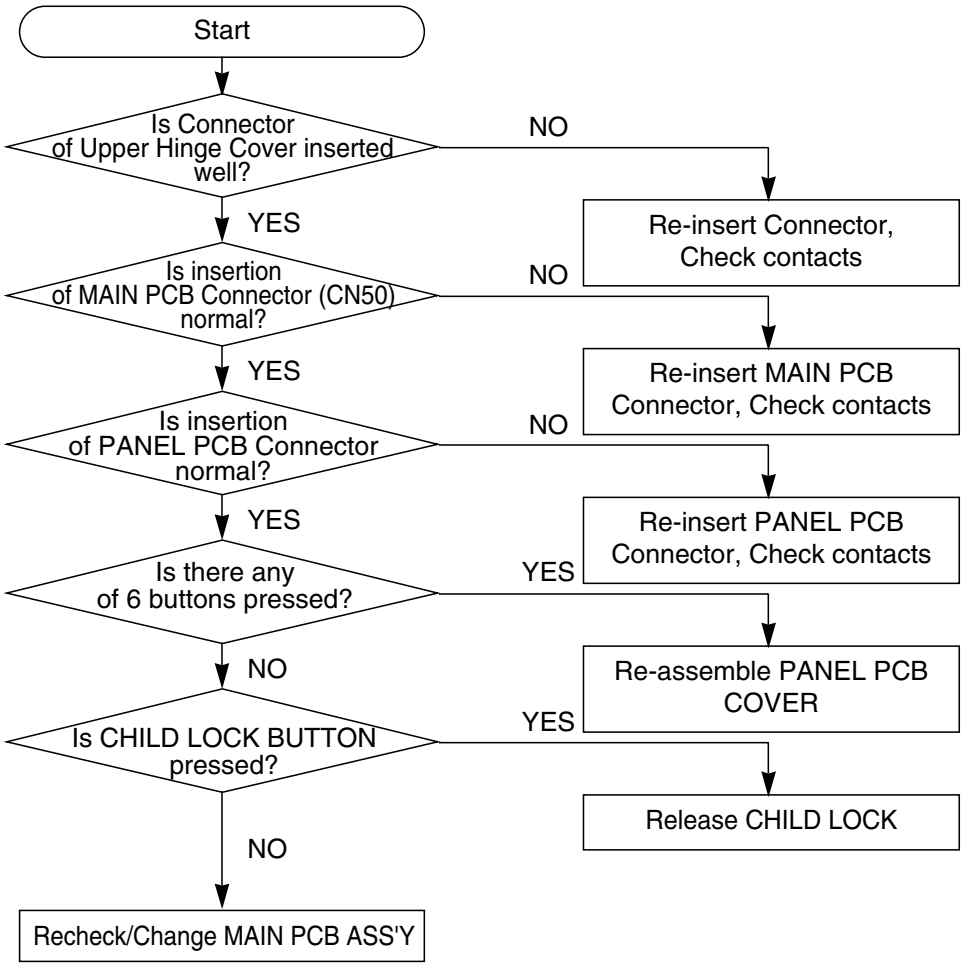

11-8) When Room Lamp does not light up(F &R Rooms are the same)

1) When F &R Room Lamps do not light up

Pre-Check

- Room Lamp(F,R)

1. Check F-Room Lamp ON after opening Freezer Door.
2. Check F-Room Lamp OFF by pushing Door S/W.
3. Check R-Room with using the same method ①,② after closing Freezer Door.
4. When it's problems, check Room Lamp and Door S/W (Refer to Door S/W sensor circuit)
5. Check the electric wire connect status.

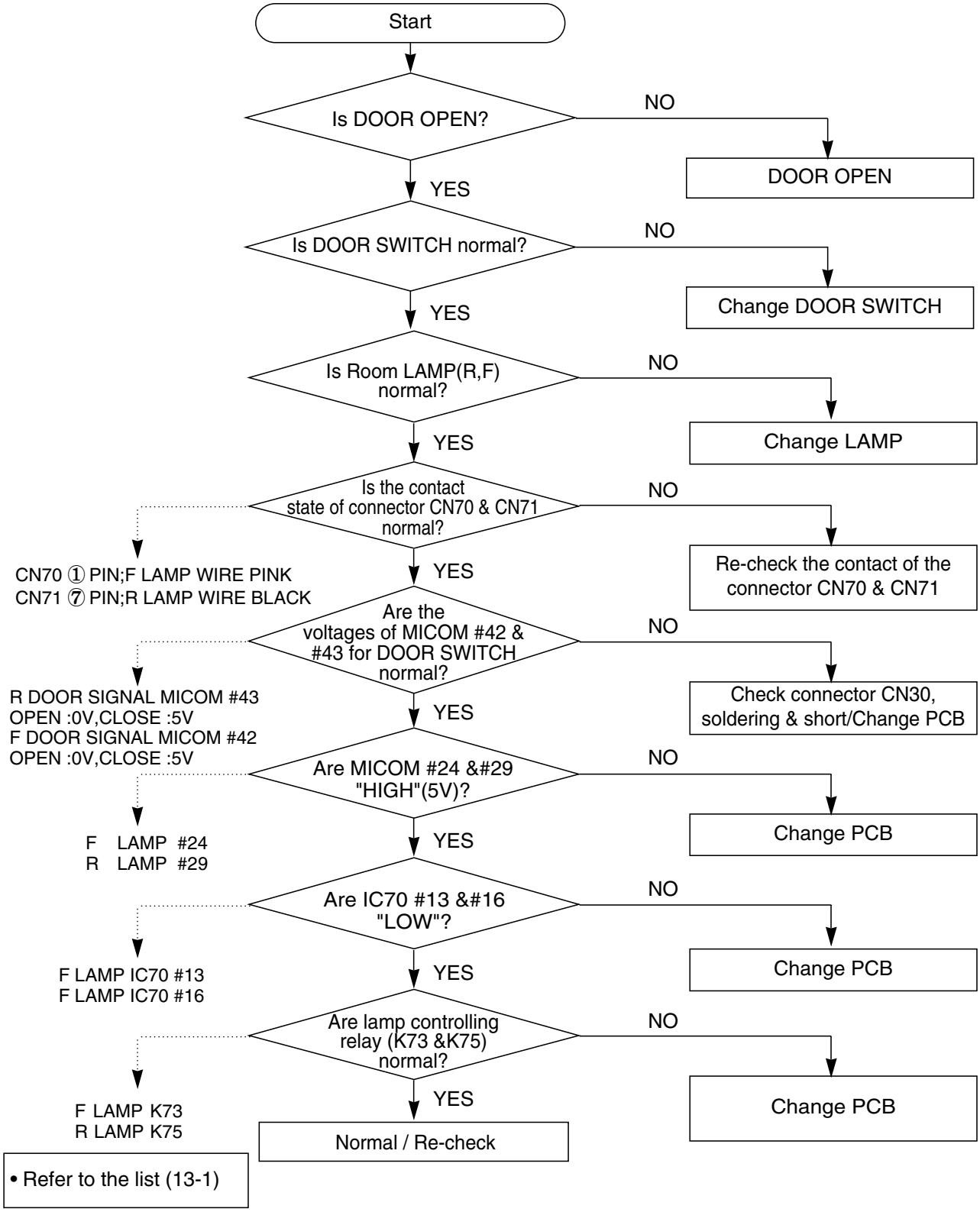
Start
Is DOOR OPEN?
NO
DOOR OPEN
YES
Is DOOR SWITCH normal?
NO
Change DOOR SWITCH
YES
Is Room LAMP(R,F) normal?
NO
Change LAMP
YES
Is the contact state of connector CN70 & CN71 normal?
NO
Re-check the contact of the connector CN70 & CN71
CN70 ① PIN;F LAMP WIRE PINK
CN71 ⑦ PIN;R LAMP WIRE BLACK
YES
Are the voltages of MICOM #42 & #43 for DOOR SWITCH normal?
NO
Check connector CN30, soldering & short/Change PCB
R DOOR SIGNAL MICOM #43
OPEN :0V,CLOSE :5V
F DOOR SIGNAL MICOM #42
OPEN :0V,CLOSE :5V
YES
Are MICOM #24 &#29 "HIGH"(5V)?
NO
Change PCB
F LAMP #24
R LAMP #29
YES
Are IC70 #13 &#16 "LOW"?
NO
Change PCB
F LAMP IC70 #13
F LAMP IC70 #16
YES
Are lamp controlling relay (K73 &K75) normal?
NO
Change PCB
F LAMP K73
R LAMP K75
YES
Normal / Re-check
• Refer to the list (13-1)

12 . Illustrated Parts Catalog.

12-1) Freezer

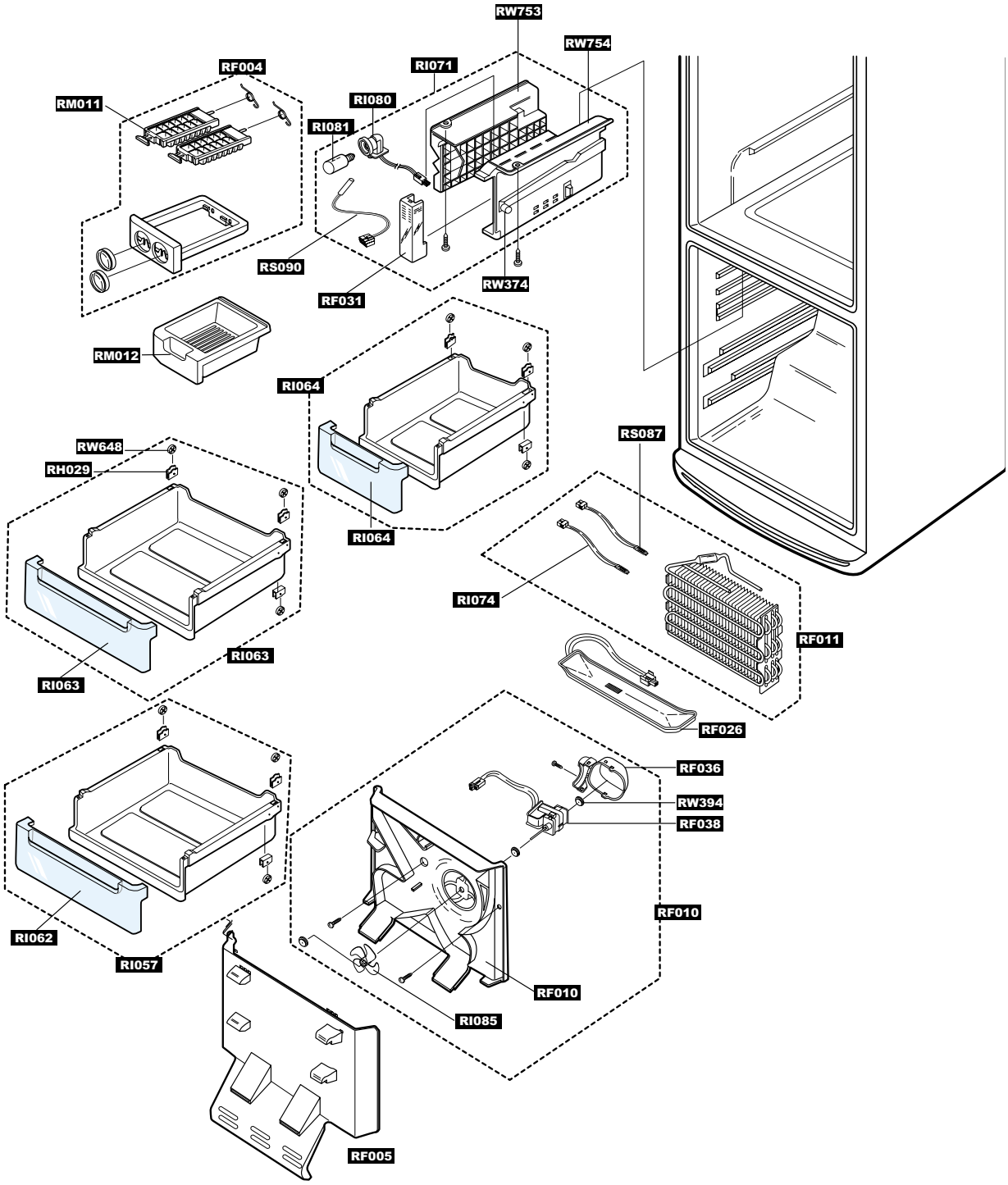

■ Parts List of Freezer

NO	CODE-NO	PART NAME	OPTION								SPEC
			RB193KASW	RB193KASB	RB193KAVQ	RB193KABB	RB213KASW	RB213KASB	RB213KABB	RB213KAVQ	
RF004	DA97-01950C	TRAY-ICE,ASSY		●				●			
RM011	DA63-02175A	TRAY ICE		●				●			
RI064	DA97-00682E	TRAY-FRE UPP,ASSY		●							
	DA97-00682F	TRAY-FRE UPP,ASSY						●			
RI064	DA63-01260A	COVER-TRAY FREE, UPP		●				●			
RI064	DA97-00683E	TRAY-FRE MID,ASSY		●							
	DA97-00683F	TRAY-FRE MID,ASSY						●			
RI063	DA63-01272A	COVER-TRAY FREE, MID		●				●			
RI057	DA97-00684E	TRAY-FRE LOW,ASSY		●							
	DA97-00684F	TRAY-FRE LOW,ASSY						●			
RI062	DA63-01259A	COVER-TRAY FREE, LOW		●				●			
RW648	DA66-10104A	ROLLER FRE		●				●			
RH029	DA71-20145A	FIXER ROLLER		●				●			
RM012	DA63-00904C	TRAY ICE CUBE		●							
	DA63-00922C	TRAY ICE CUBE						●			
RF005	DA63-00940A	COVER EVAP FR(FRE),ASSY		●				●			
RF011	DA97-00192F	EVAP-FRE ASSY		●				●			115V/242W
RI074	DA47-00095E	ASS'Y-FUSE THERMO(77˚C)		●				●			EVAP FRE.250V
RS087	DA32-00006C	SENSOR ASSY		●				●			EVAP FRE
RI071	DA97-00122J	ASSY SUPT-FREE		●							110~130V
	DA97-00122K	ASSY SUPT-FREE						●			110~130V
RW753	DA61-70114B	SUPPORT-FREE,L		●				●			
RW754	DA61-70115C	SUPPORT-FREE,R		●				●			
RW374	DA63-40006A	GROMMET RAIL		●				●			ASSY SUPT-FREE
RF031	DA63-00924A	COVER-LAMP,FRE		●							
	DA63-00923A	COVER-LAMP,FRE						●			
RI080	DA47-00112E	LAMP HOLDER		●				●			
RS090	DA32-10105S	SENSOR ASSY		●				●			ASSY SUPT FREE
RI081	4713-001173	LAMP-INCANDESCENT		●				●			110~130V / 15W
RF010	DA97-00390D	COVER-EVAP RE(FRE),ASSY		●				●			115V
RF010	DA63-00903A	COVER-EVAP REAR		●				●			
RF036	DA61-00081B	CASE-MOTOR		●				●			
RI085	DA31-00019A	FAN-PROPELLER		●				●			
RF038	DA31-00002V	MOTOR-FAN		●				●			115V,60HZ
RW394	DA63-00771A	GROMMET-FAN MOTOR		●				●			
RF026	DA97-00195H	DRAIN PLATE FRE ASSY		●				●			115V/52W

12-2) Fridge

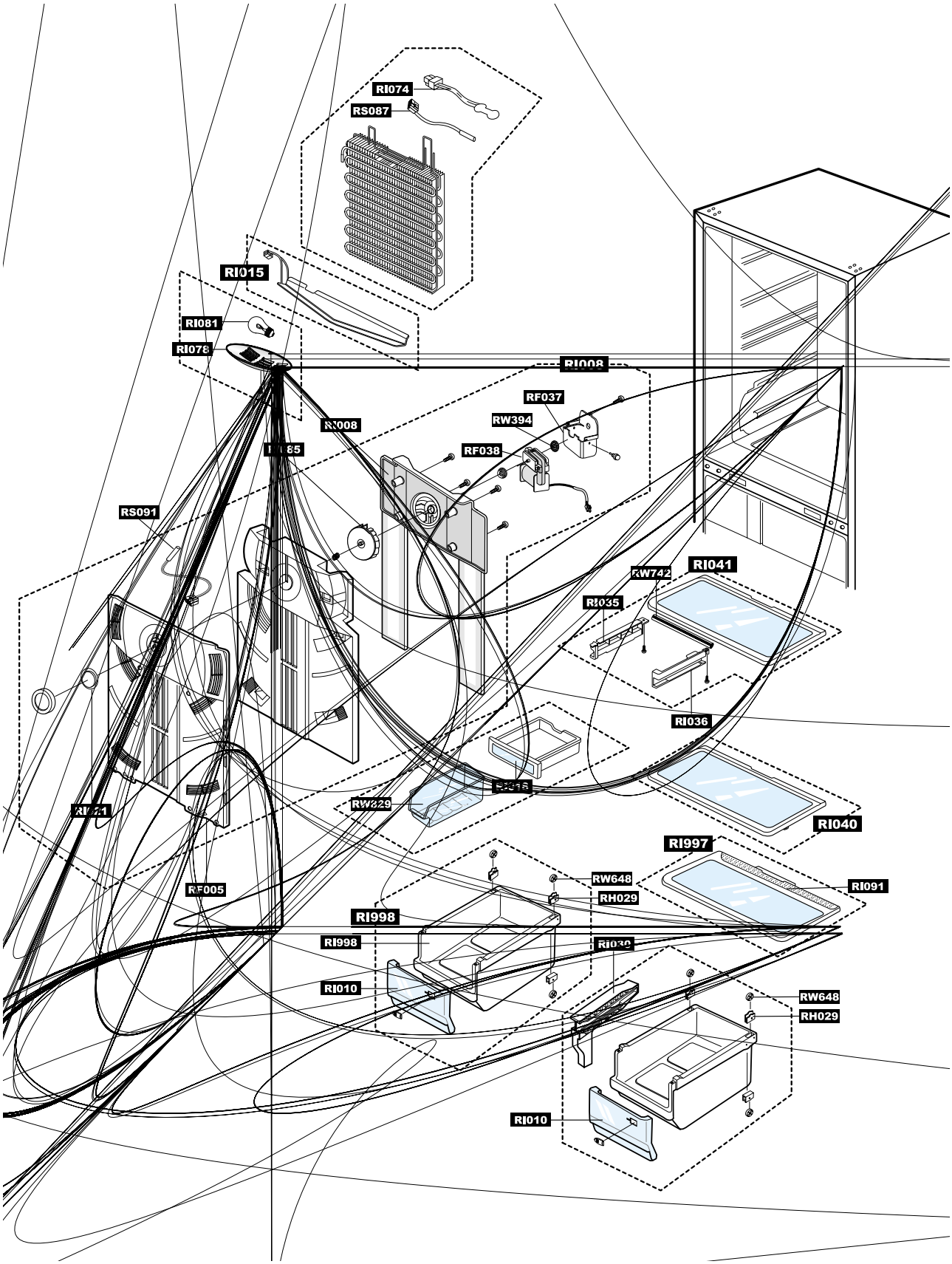
RI074
RS087
RI015
RI081
RI078
RI008
RI008
RF037
RW394
RF038
RS091
RW742
RI041
RI035
RI036
RW829
RI040
RI997
RW648
RH029
RI091
RF005
RI998
RI998
RI010
RW648
RH029
RI010

■ Parts List of Fridge

NO	CODE-NO	PART NAME	OPTION								SPEC
			RB193KASW	RB193KASB	RB193KAVQ	RB193KABB	RB213KASW	RB213KASB	RB213KABB	RB213KAVQ	
RI081	4713-001206	LAMP-INCANDESCENT	●				●				
RI078	DA63-02799A	COVER-LAMP,REF	●				●				
RI030	DA61-00761B	RAIL-VEG, MID	●								
	DA61-00760B						●				
RW829	DA67-40250E	TRAY-UTILITY	●				●				
RI074	DA47-00095D	THERMO FUSE-ASSY	●				●				
RS087	DA32-00006C	SENSOR ASSY	●				●				
RI018	DA97-00296L	ASSY TRAY-CHILLED ROOM	●								
	DA97-00296M						●				
RI015	DA97-00441B	ASSY DRAIN-PLATE,REF	●				●				
RI008	DA97-00459Q	ASSY COVER EVAP-REF	●				●				
RF038	DA31-00003N	MOTOR FAN	●				●				
RI085	DA31-00016A	FAN-CIRCUIT	●				●				
RS091	DA32-10105T	SENSOR ASSY	●				●				
RF037	DA63-00183B	COVER-MOTOR	●				●				
RW394	DA63-00771A	GROMMET-FAN MOTOR	●				●				
RI008	DA63-00932A	COVER-EVAP RE,REF	●				●				
RF005	DA63-00933B	COVER-EVAP FR,FRE	●				●				
RI021	DA63-0093A	COVER-SENSOR	●				●				
RI997	DA97-00663C	ASSY COVER-VEG	●								
	DA97-00663D						●				
RI091	DA64-00449B	TRIM-COVER VEG	●								
	DA64-00448B						●				
RI041	DA97-00664N	ASSY SHELF REF-UPP	●								
	DA97-00664P						●				
RI035	DA61-00368B	RAIL-CHILLED, L	●								
	DA61-00367B						●				
RI036	DA61-00370B	RAIL-CHILLED, R	●								
	DA61-00369B						●				
RW742	DA61-01795B	SUPPORT-CHILLED	●				●				
RI040	DA97-00664L	ASSY SHELF REF-MID	●								
	DA97-00664M						●				
RI998	DA97-00681E	ASSY CASE VEG	●								
	DA97-00681F						●				
RI998	DA61-00759B	CASE-VEG, REF	●								
	DA61-00762B						●				
RI010	DA63-01270B	COVER-VEG REF	●				●				
RW648	DA66-10104A	ROLLER-FRE	●				●				
RH029	DA71-20145A	FIXER-ROLLER	●				●				

12-3) Door of Fridge

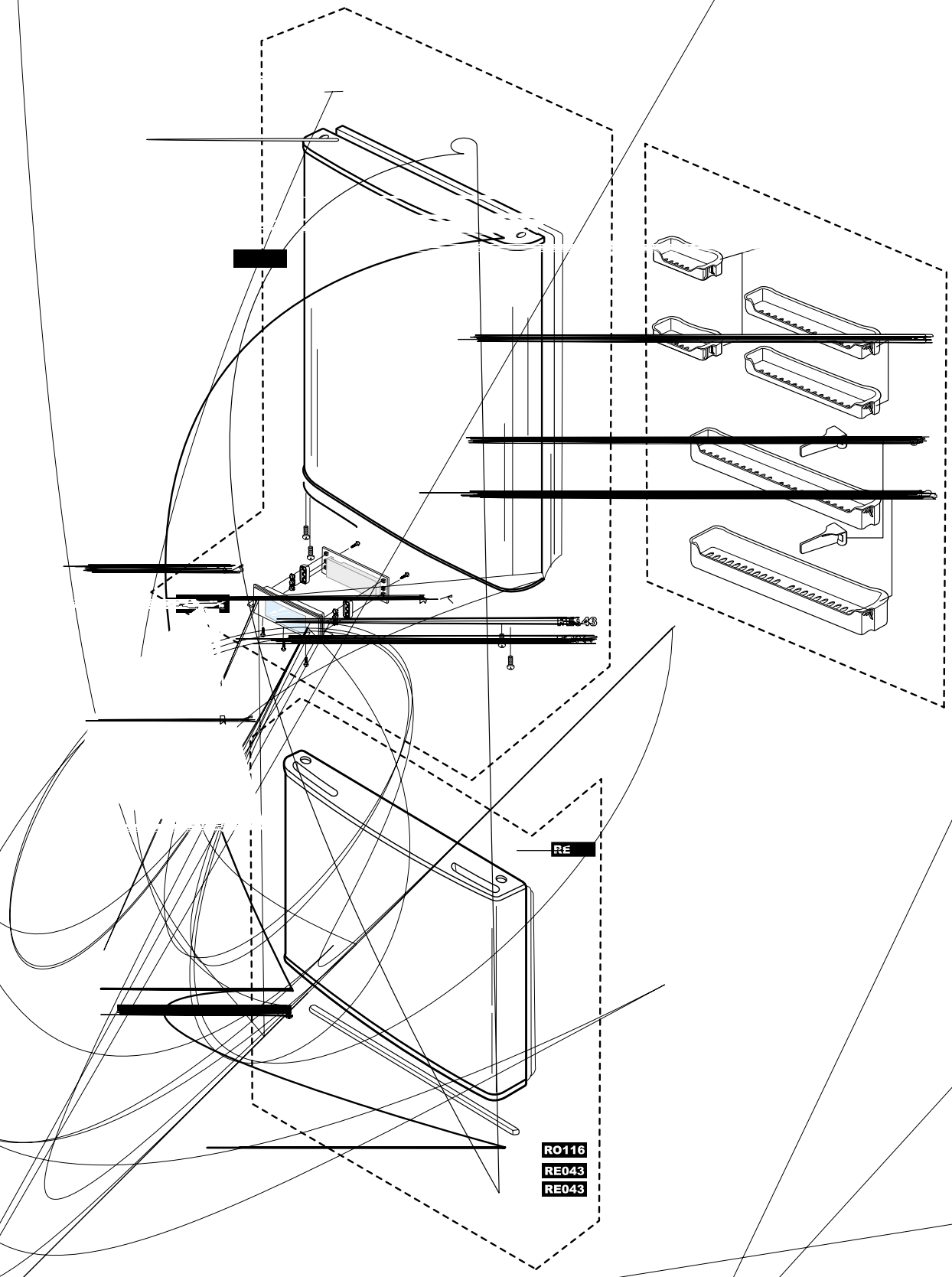

■ Parts List of Fridge Door

NO	CODE-NO	PART NAME	OPTION								SPEC
			RB193KASW	RB193KASB	RB193KAVQ	RB193KABB	RB213KASW	RB213KASB	RB213KABB	RB213KAVQ	
RE001	DA91-02052A	ASSY DOOR FOAM REF	●				●				
	DA91-02052B			●				●			
	DA90-02052C				●				●		
	DA90-02052D					●				●	
RE043	DA61-02158A	STOPPER-MID			●				●		
RO116	DA63-02516A	GROMMET HINGE			●				●		
RD001	DA91-02051A	ASSY DOOR FOAM FRE	●				●				
	DA91-02051B			●				●			
	DA91-02051C				●				●		
	DA91-02051D					●				●	
RE043	DA61-02157A	STOPPER-DOOR LOW			●				●		
RE043	DA61-02158A	STOPPER-MID			●				●		
RO116	DA63-02516A	GROMMET HINGE			●				●		
RE053	DA63-01052A	GASKET DOOR-SUB,FRE			●				●		
RE021	DA61-00365C	GUIDE BOTTLE			●				●		
RE024	DA63-00926B	GUARD-REF UPP,L			●				●		
RE024	DA63-00927B	GUARD-REF UPP,R			●				●		
RE025	DA63-01263C	GUARD-REF LOW			●				●		
RD025	DA97-02788D	ASSY COVER-CONTROL PANEL	●			●	●			●	
	DA97-02788E			●				●			
	DA97-02788K				●				●		
RO052	DA41-00264B	PBA PANEL			●				●		
RD025	DA63-02518D	COVER-CONTROL PANEL	●			●	●			●	
	DA63-02518E			●				●			
	DA97-02518K				●				●		
RE058	DA63-02517A	COVER-CAP DOOR REF UPP			●				●		
RO058	DA67-01230A	CAP-HANDLE			●				●		

■ Parts List of Cabinet

NO	CODE-NO	PART NAME	OPTION								SPEC
			RB193KASW	RB193KASB	RB193KAVQ	RB193KABB	RB213KASW	RB213KASB	RB213KABB	RB213KAVQ	
RO001	DA61-01051B	FOOT-FRONT			●				●		
RO036	DA61-02162A	HINGE-LOW			●				●		
RE046	DA64-20138B	TRIM-PLATE ABSORBER			●				●		
RO117	DA63-02530B	COVER HINGE-LOW	●			●	●			●	
	DA63-02530A			●				●			
	DA63-02530C				●				●		
RO003	DA63-02531B	COVER LEG-FRONT	●			●	●			●	
	DA63-02531A			●				●			
	DA63-02531C				●				●		
RO044	DA63-02520A	COVER HINGE-UPP L	●			●	●			●	
	DA63-02520B			●				●			
	DA63-02520C				●				●		
RO045	DA63-02521A	COVER HINGE-UPP R	●			●	●			●	
	DA63-02521B			●				●			
	DA63-02521C				●				●		
RO005	DA39-10165E	CBF-POWER CORD			●				●		
RW139	DA67-00178A	CAP DOOR-S/W			●				●		
RO040	DA97-02782A	ASSY HINGE UPP			●				●		
RO039	DA97-02783A	ASSY HINGE MID			●				●		
RO004	2501-001045	C-OIL			●				●		
RO066	DA26-00022B	TRANS POWER			●				●		
RF038	DA31-00010E	FAN-ASSY			●				●		
RH005	DA34-10003D	RELAY PROTECTOR O/L			●				●		
RI076	DA34-10122D	SWITCH-DOOR			●				●		
RH006	DA35-10013N	RELAY-PTC			●				●		
RW931	DA39-20389E	WIRE HARNESS-EARTH			●				●		
RO007	DA41-00293B	PBA MAIN			●				●		
RO048	DA63-01271A	CASE-PCB PANEL			●				●		
RH021	DA61-01957A	CLIP-DRYER			●				●		
RW903	DA62-20001Q	TUBE PVC			●				●		
RW390	DA63-00951A	GROMMET-DRAIN,HOSE			●				●		
RH004	DA63-01866A	COVER RELAY			●				●		
RO048	DA63-01271A	COVER PCB-PANEL			●				●		
RH023	DA63-40171D	GROMMET-SUCT PIPE			●				●		
RH014	DA73-30102B	DRYER-ASSY			●				●		
RW011	DA97-00278A	ASSY TUBE-DRAIN			●				●		
RW903	DA62-20001Q	TUBE PVC			●				●		
RW391	DA63-00951B	GROMMET-DRAIN,HOSE			●				●		
RH001	DA97-00408D	ASSY COVER-COMP			●				●		
RH019	DA60-90146A	PIN-CASTER			●				●		
RH011	DA61-40126B	CASTER-REAR			●				●		
RW007	DA97-00921A	ASSY PIPE-SUCT			●				●		
RH003	DA97-00180N	ASSY TRAY-DRAIN WATER			●				●		
RH008	DA31-10110G	MOTOR CIRCUIT			●				●		
RH022	DA63-40128A	GROMMET-SUB CONDENSER			●				●		
RH002	MK172CL2U/E08	COMPRESSOR			●				●		

SAFETY PRECAUTIONS FOR AS

- Upon electronic Control system repair/change,make sure the set unplugged.
  ➪ Be ware of electric shock.
- Use rated electronic Control equipment.
  ➪ Make sure to check out ModeL name,Rated voltage,Rated current,Operation Temp,etc.
- Upon repair,make sure that harnesses are not to be water-penetrated and are bundled tight.
  ➪ Should not be detached by a certain amount of external force.
- Upon repair,completely remove dust or other foreign substances from housing,harness, connector,etc.
  ➪ To prevent fire by tracking,short,etc.
- Check out whether water has penetrated into the electronic Control system.
  ➪ If there is any kind of trace,take necessary measures such as related component change, insulation tapping,etc.
- After repair,check out the assembled state of parts.
  ➪ It should be the same as the previous state.
- Check out the surrounding conditions.
  ➪ Change the location,if the fridge is located at humid,wet places or the installed state is unstable.
- If needed,ground the fridge.
  ➪ Especially,if there is a possibility of electric leakage,ground is indispensable.
- Do not allow consumers to overload a certain outlet.
- Check out whether the power cord or the outlet is broken,squeezed,chopped off or heat-deformed.
  ➪ Repair or replace the defective power cord/outlet immediately.
  ➪ Make sure the power cord is not punctuated or stomped down.
- Do not allow consumers to keep food unstable or place bottles in the Freezer Room.
- Do not allow consumers to repair the fridge for themselves.
- Do not allow consumers to keep things except for food.
  ➪ Pharmaceutical,Chemical substances :These are not possible to be fine-Controlled with a consumer fridge.
  ➪ Flammable material (alcohol,benzene,ether,LPG,etc):possibility of explosion.

13. REFERENCE

13-1) Reference (Measure Load Terminals)

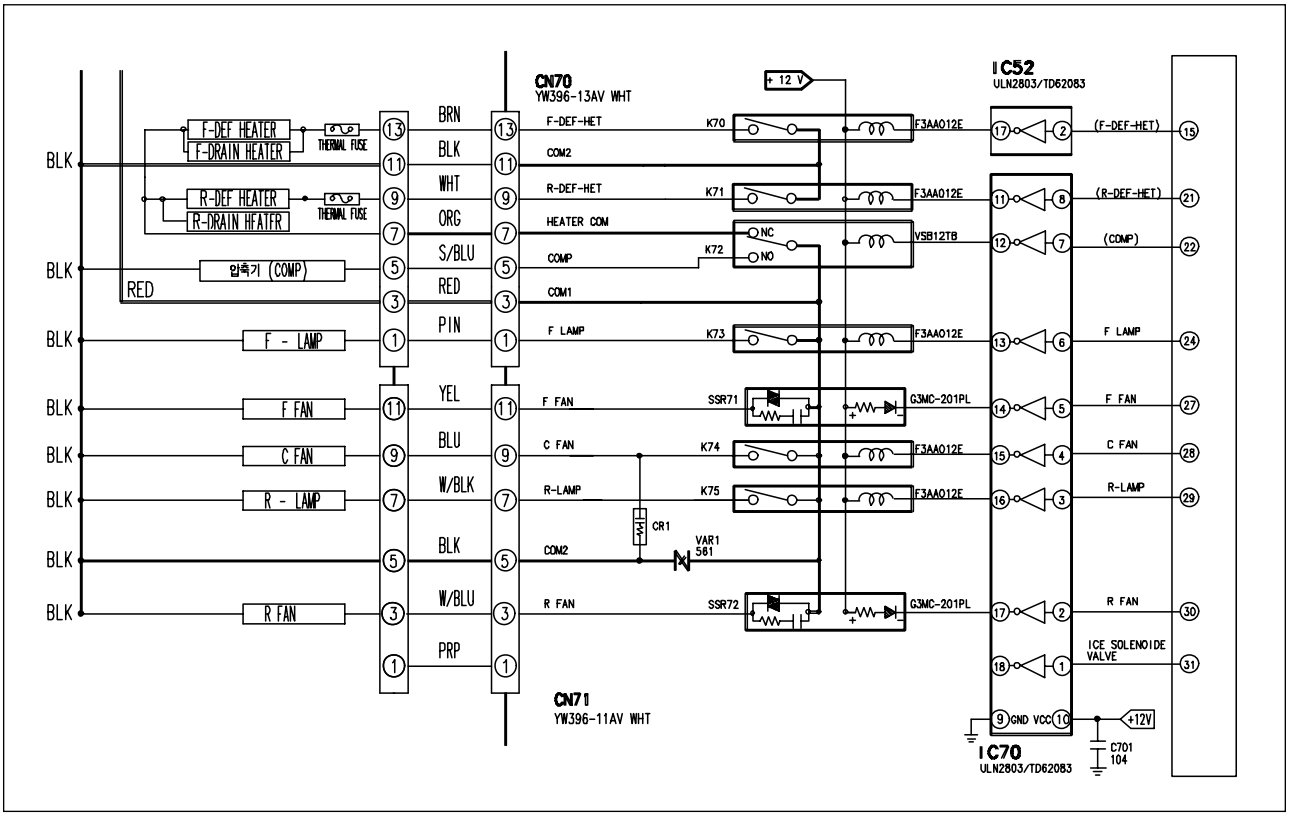

* Turn off Power, disassemble Housing connected to MAIN PCB CN70,71 and measure followings				
LOAD	MEASURING TERMINALS PCB MAIN	VALUE	DEFECTS	OTHERS
1) F DEFROST HEATER 2) F DRAIN HEATER	CN70 ⑬ & ⑦	0 Ω	THERMAL FUSE,HEATER,WIRE SHORT	VALUE FOR NORMAL HETAER
		∞ Ω	THERMAL FUSE,HEATER,WIRE CUT	
1)R DEFROST HEATER 2)R DRAIN HEATER	CN71 ⑨ & ⑦	0 Ω	THERMAL FUSE,HEATER,WIRE SHORT	VALUE FOR NORMAL MOTOR
		∞ Ω	THERMAL FUSE,HEATER,WIRE CUT	
F FAN MOTOR	CN71 ⑪ & ⑤	0 Ω	MOTOR,WIRE SHORT MOTOR,WIRE	VALUE FOR NORMAL MOTOR
		∞ Ω	CUT,HOUSING SLIPPED AWAY	
R FAN MOTOR	CN71 ③ & ⑤	0 Ω	MOTOR,WIRE SHORT MOTOR,WIRE	VALUE FOR NORMAL MOTOR
		∞ Ω	CUT,HOUSING SLIPPED AWAY	
COMP. FAN MOTOR	CN71 ⑨ & ⑤	0 Ω	MOTOR,WIRE SHORT MOTOR,WIRE	VALUE FOR NORMAL MOTOR
		∞ Ω	CUT,HOUSING SLIPPED AWAY	
R LAMP	CN71 ⑦ & ⑤	0 Ω	LAMP,WIRE SHORT LAMP,WIRE	VALUE FOR NORMAL MOTOR
		∞ Ω	CUT,HOUSING/LAMP SLIPPED AWAY	
F LAMP	aCN70 ① & ⑪	0 Ω	LAMP,WIRE SHORT LAMP,WIRE	VALUE FOR NORMAL MOTOR
		∞ Ω	CUT,HOUSING/LAMP SLIPPED AWAY	

* Turn on Power and check status of Relay &Driving Circuit by checking followings according to load operation .

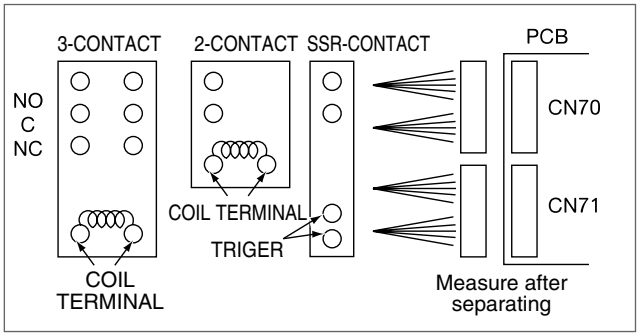

Note) NC →NORMAL CLOSE
(C-TERMINAL & ON-TERMINAL)
NO →NORMAL OPEN
(C-TERMINAL & OPEN-TERMINAL)
C →COMMON TERMINAL

OPERATION	RELAY	TERMINALS	VALUE	WHEN IT IS DIFFERENT FROM MEASURED VALUE
R,F DEFROST & COMP OFF	K70	CN70 ⑪-⑬	SUPPLY VOLTAGE (SV)	K70 CONTACT SHORT,FAULTY DRIVING CIRCUIT
	K71	CN70 ⑪-⑨	SV	K71 CONTACT SHORT,FAULTY DRIVING CIRCUIT
	K72	CN70 ⑤-③	SV	K72 NO CONTACT SHORT,FAULTY DRIVING CIRCUIT
COMP ON	K70	CN70 ⑪-⑬	5~30V	FAULTY K70 OR K72 NC CONTACT SHORT,FAULTY DRIVING CIRCUIT
	K71	CN70 ⑪-⑨	5~30V	FAULTY K71 OR K72 NC CONTACT SHORT,FAULTY DRIVING CIRCUIT
	K72	CN70 ⑤-③	0V	K72 NO CONTACT OPEN,FAULTY DRIVING CIRCUIT
R DEFROST ON	K71	CN70 ⑨-⑪	0V	FAULTY K71,K72 NC CONTACT OPEN,FAULTY DRIVING CIRCUIT
	K72	CN70 ⑤-③	SV	K72 NO CONTACT SHORT,FAULTY DRIVING CIRCUIT
F DEFROST ON	K70	CN70 ⑬-⑪	0V	K70 CONTACT SHORT,FAULTY DRIVING CIRCUIT
	K72	CN71 ⑤-③	SV	K72 NO CONTACT SHORT,FAULTY DRIVING CIRCUIT
F FAN ON	SSR71	CN71 ⑪-CN70 ③	0V	SSR71 OPEN,FAULTY DRIVING CIRCUIT
R FAN ON	SSR72	CN71 ③-CN70 ③	0V	SSR72 OPEN,FAULTY DRIVING CIRCUIT
C FAN ON	K74	CN71 ⑨-CN70 ③	0V	K74 NO CONTACT OPEN,,FAULTY DRIVING CIRCUIT
R LAMP ON	K75	CN71 ⑦-CN70 ③	0V	K75 NO CONTACT OPEN,FAULTY DRIVING CIRCUIT(DOOR SWITCH)
F LAMP ON	K73	CN70 ①-③	0V	K73 NO CONTACT SHORT,FAULTY DRIVING CIRCUIT(DOOR SWITCH)

13-2) Reference (Measure Sensor Terminals)

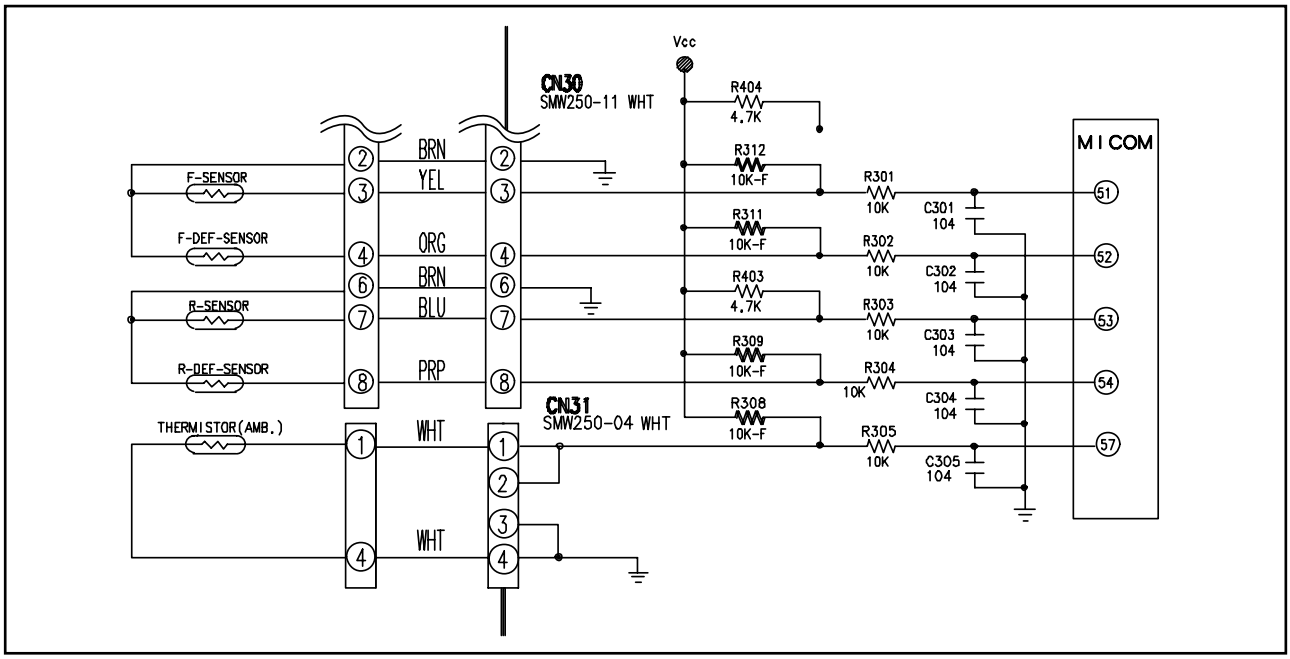

* Check after disassembling connected to MAIN PCB CN30 & CN31
* Because it is NTC TYPE Sensor,resistance decreases as temp increases

1. Measure resistance between CN30 ⑦ and ⑥ for R-Sensor.
2. Measure resistance between CN30 ② and ③ for F-Sensor.
3. Measure resistance between CN30 ⑧ and ⑥ for R Defrost Sensor.
4. Measure resistance between CN30 ② and ④ for F Defrost Sensor.
5. Measure resistance between CN31 ① and ④ for Ambient Sensor.
6. Compare the above values with current temps of Sensor locations (20.Temp Sensing Circuit Table)and Part Spec in Manual and evaluate them.

13-3) Others (Measure Load Terminals)

NO	ITEM	SPEC	CODE NO	REMARK
1	PBA MAIN	05 W2 PBA MAIN	DA41-00293B	
2	PBA PANEL	05 W2 PBA PANEL,BLUE	DA41-00264B	
3	TRANS DC	115V/60Hz	DA26-00022B	
4	SENSOR	F DEFROST SENSOR	DA32-00006C	
		R DEFROST SENSOR	DA32-00006C	
		F SENSOR	DA32-10105S	
		R SENSOR	DA32-10105T	
		AMBIENT SENSOR	DA32-00011L	

- The second part (DA41-XXXXX?)of CODE for MAIN PCB ASS'Y PART may change according to MICOM or Option change,so check it when asking for parts.

14. PCB DIAGRAM

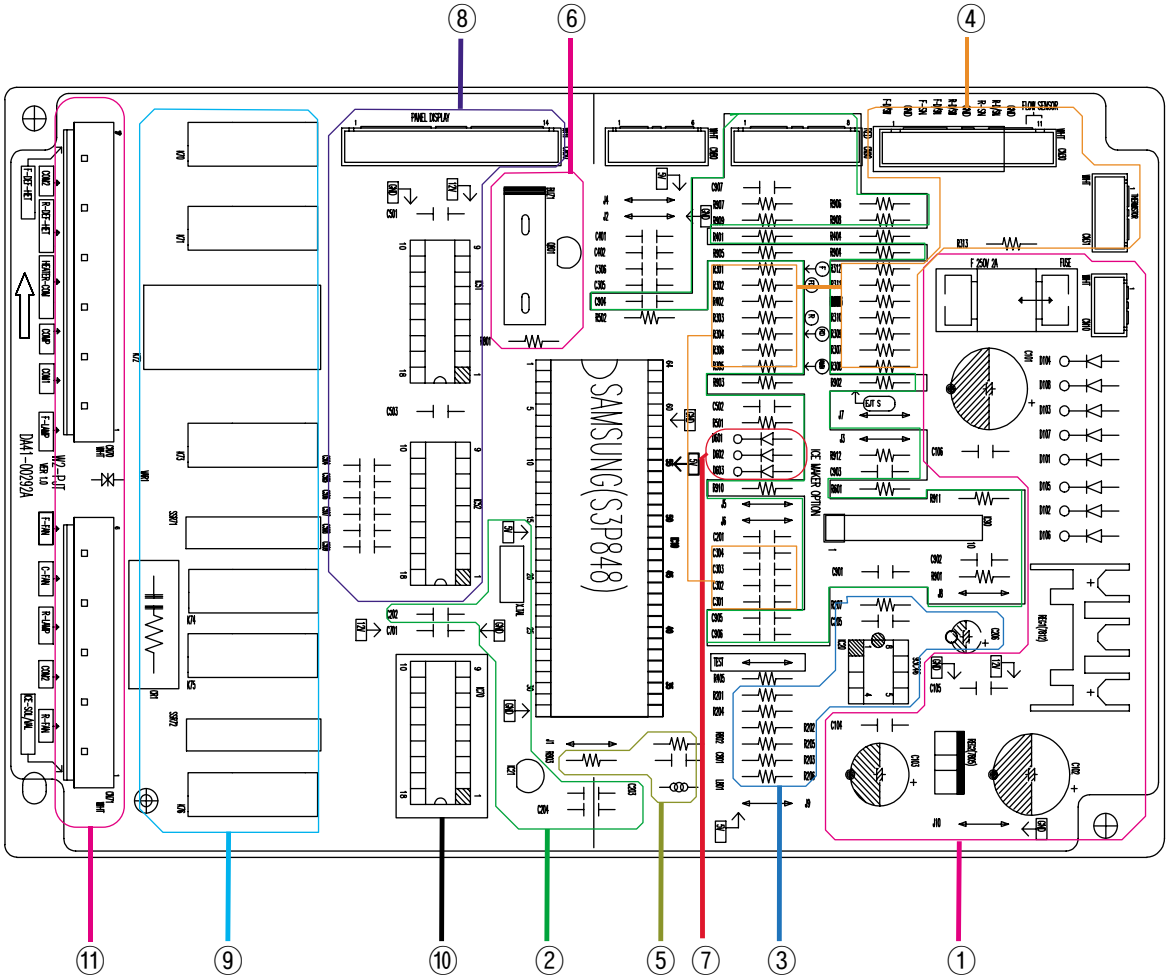

1. AC is input via Connector CN10 and DC12V,5V and GND are supplied via Regulator.
2. Oscillator generating clocks required for the MICOM program control &Reset circuit initializing programs upon power on/off.
3. EEPROM:It stores data.
4. It receives various sensor signals such as F/R Door S/W On/Off and sends them to MICOM after filtering their noises.
5. PLC (Power Line Communication)Circuit
6. Buzzer Circuit
7. Circuit for model classifying options
8. It is the display driving part controlling the LEDs and the button signals.
9. It is Relay controlling AC load and operates by receiving drive signals through IC ⑪.
10. Relay Driver IC
11. AC connector

15. CONNECTOR ARRANGEMENT&DESCRIPTIONS

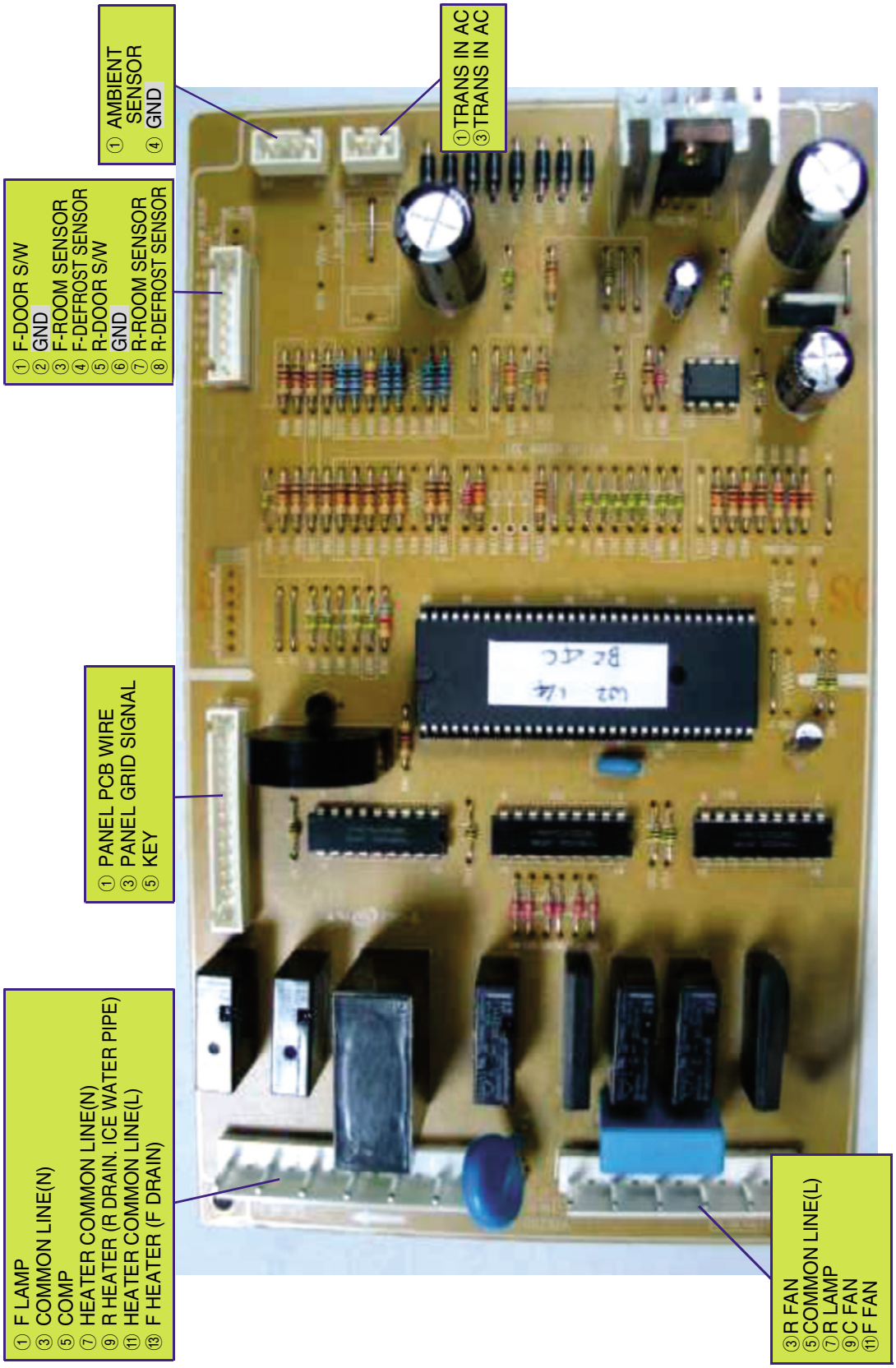

16. BLOCK DIAGRAM

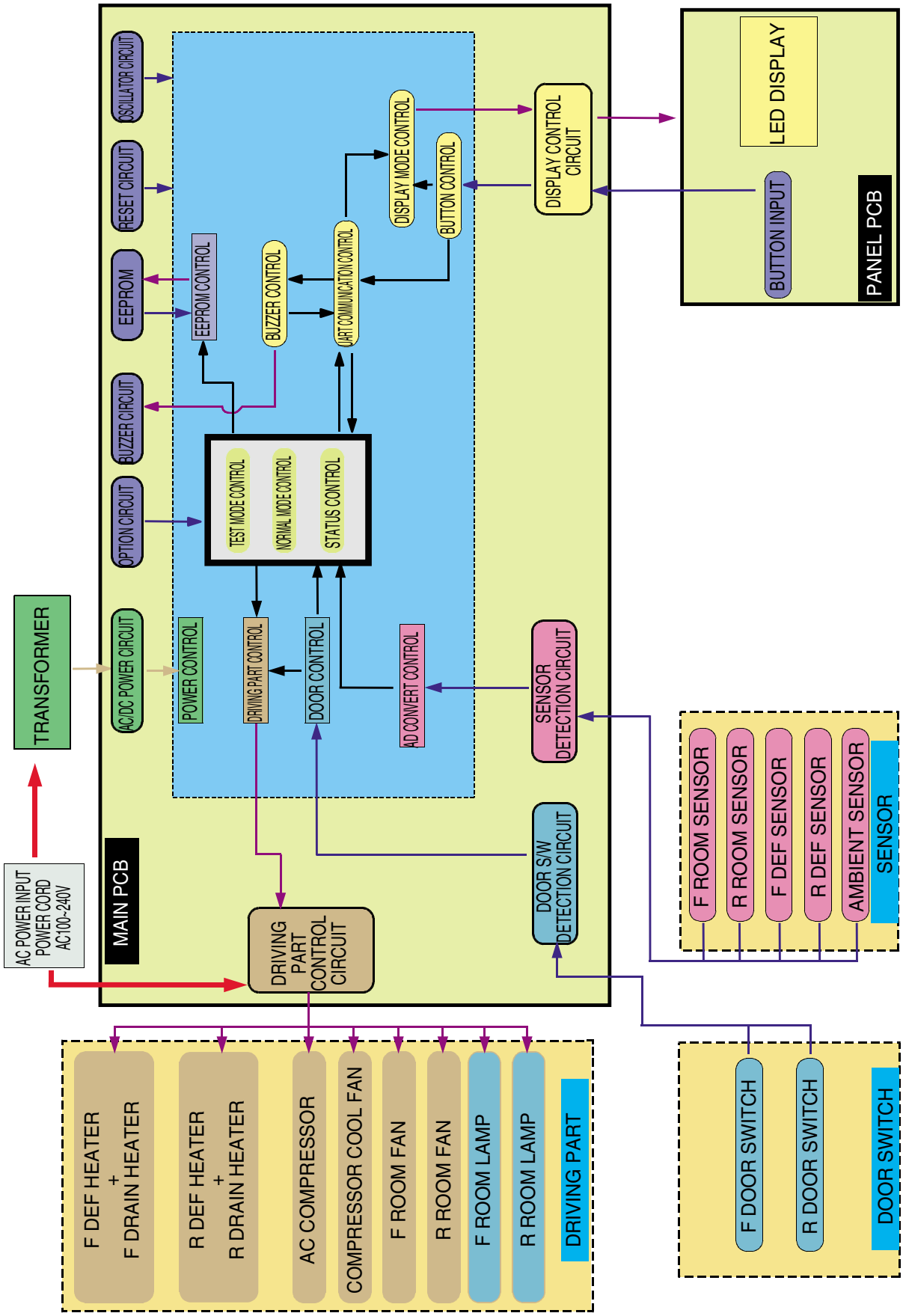

17. CIRCUIT DIAGRAM

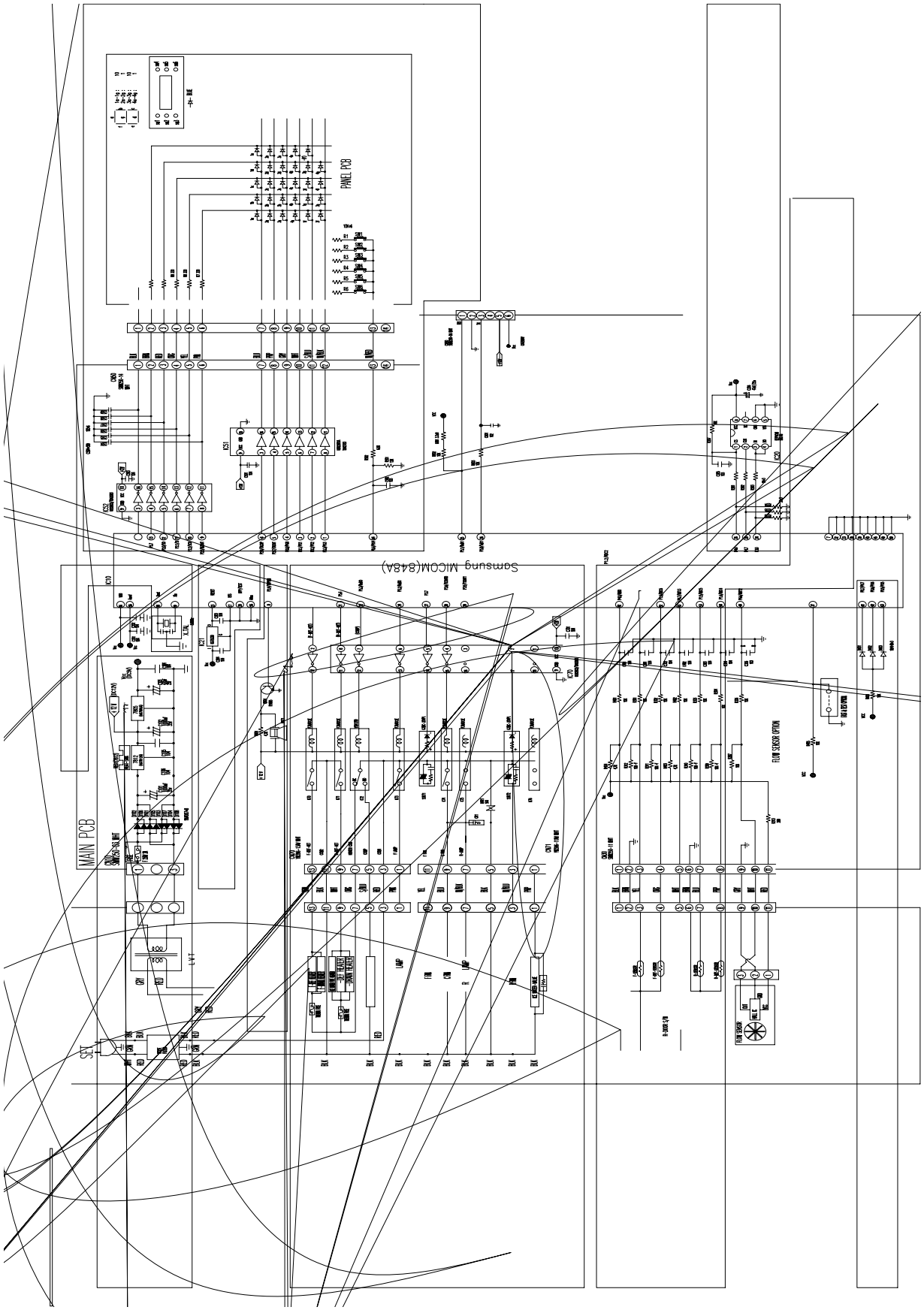

18. WIRING SCHEMATIC

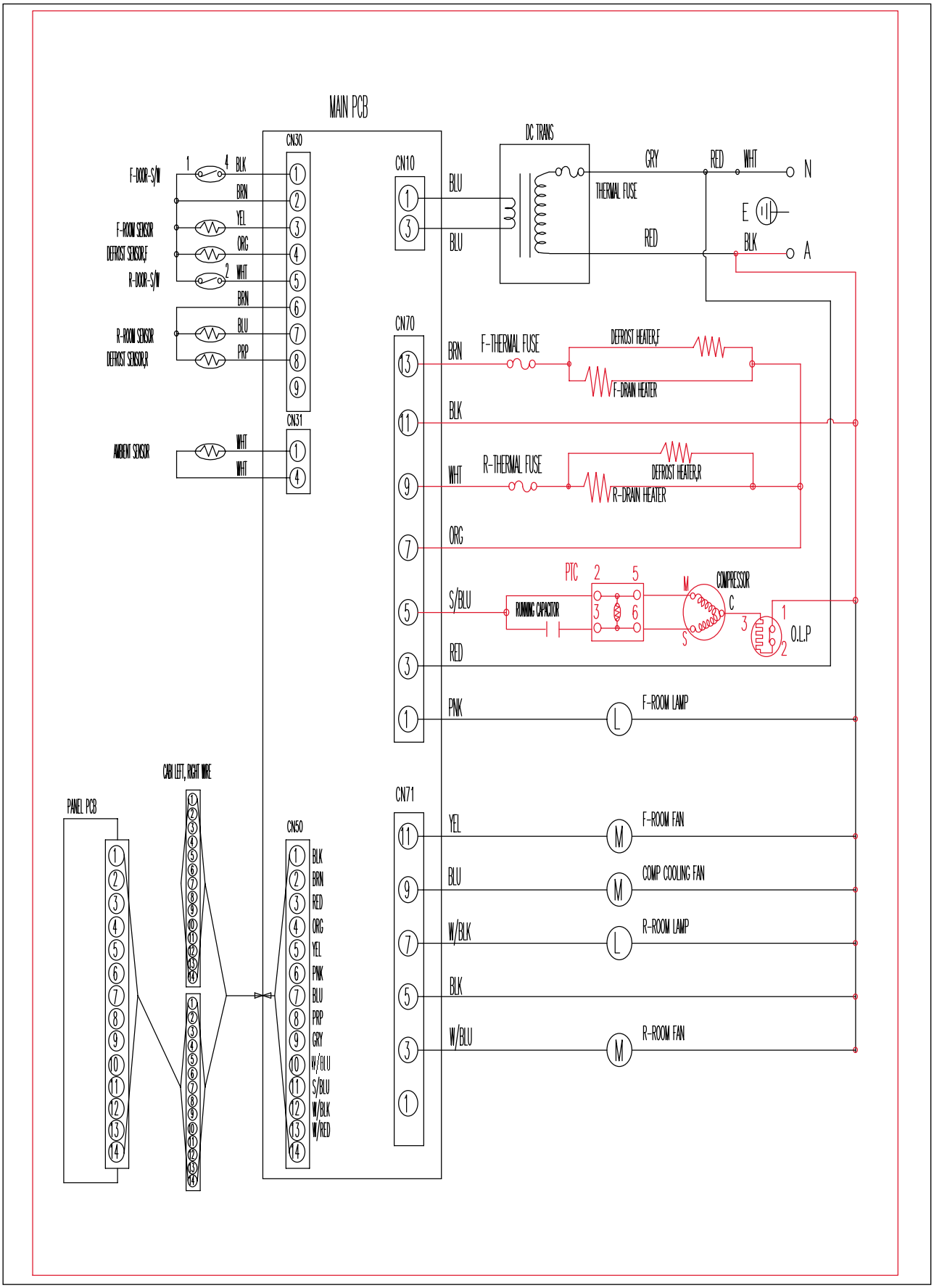

19. Temp to Resistance of Sensor &MICOM PORT Voltage

- Sensor CHIP:PX41C Standard

℃	˚F	V	Ω	℃	˚F	V	Ω	℃	˚F	V	Ω
-50	-58	4.694	153319	-5	23	3.107	16419	40	104	1.153	2997
-49	-56.2	4.677	144794	-4	24.8	3.057	15731	41	105.8	1.124	2899
-48	-54.4	4.659	136798	-3	26.6	3.006	15076	42	107.6	1.095	2805
-47	-52.6	4.641	129294	-2	28.4	2.955	14452	43	109.4	1.068	2714
-46	-50.8	4.622	122248	-1	30.2	2.904	13857	44	111.2	1.040	2627
-45	-49	4.602	115631	0	32	2.853	13290	45	113	1.014	2543
-44	-47.2	4.581	109413	1	33.8	2.802	12749	46	114.8	0.988	2462
-43	-45.4	4.560	103569	2	35.6	2.751	12233	47	116.6	0.963	2384
-42	-43.6	4.537	98073	3	37.4	2.700	11741	48	118.4	0.938	2309
-41	-41.8	4.514	92903	4	39.2	2.649	11271	49	120.2	0.914	2237
-40	-40	4.490	88037	5	41	2.599	10823	50	122	0.891	2167
-39	-38.2	4.465	83456	6	42.8	2.548	10395	51	123.8	0.868	2100
-38	-36.4	4.439	79142	7	44.6	2.498	9986	52	125.6	0.846	2036
-37	-34.6	4.412	75077	8	46.4	2.449	9596	53	127.4	0.824	1973
-36	-32.8	4.385	71246	9	48.2	2.399	9223	54	129.2	0.803	1913
-35	-31	4.356	67634	10	50	2.350	8867	55	131	0.783	1855
-34	-29.2	4.326	64227	11	51.8	2.301	8526	56	132.8	0.762	1799
-33	-27.4	4.296	61012	12	53.6	2.253	8200	57	134.6	0.743	1745
-32	-25.6	4.264	57977	13	55.4	2.205	7888	58	136.4	0.724	1693
-31	-23.8	4.232	55112	14	57.2	2.158	7590	59	138.2	0.706	1642
-30	-22	4.199	52406	15	59	2.111	7305	60	140	0.688	1594
-29	-20.2	4.165	49848	16	60.8	2.064	7032	61	141.8	0.670	1547
-28	-18.4	4.129	47431	17	62.6	2.019	6771	62	143.6	0.653	1502
-27	-16.6	4.093	45146	18	64.4	1.974	6521	63	145.4	0.636	1458
-26	-14.8	4.056	42984	19	66.2	1.929	6281	64	147.2	0.620	1416
-25	-13	4.018	40938	20	68	1.885	6052	65	149	0.604	1375
-24	-11.2	3.980	39002	21	69.8	1.842	5832	66	150.8	0.589	1335
-23	-9.4	3.940	37169	22	71.6	1.799	5621	67	152.6	0.574	1297
-22	-7.6	3.899	35433	23	73.4	1.757	5419	68	154.4	0.560	1260
-21	-5.8	3.858	33788	24	75.2	1.716	5225	69	156.2	0.546	1225
-20	-4	3.816	32230	25	77	1.675	5039	70	158	0.532	1190
-19	-2.2	3.773	30752	26	78.8	1.636	4861	71	159.8	0.519	1157
-18	-0.4	3.729	29350	27	80.6	1.596	4690	72	161.6	0.506	1125
-17	1.4	3.685	28021	28	82.4	1.558	4526	73	163.4	0.493	1093
-16	3.2	3.640	26760	29	84.2	1.520	4369	74	165.2	0.481	1063
-15	5	3.594	25562	30	86	1.483	4218	75	167	0.469	1034
-14	6.8	3.548	24425	31	87.8	1.447	4072	76	168.8	0.457	1006
-13	8.6	3.501	23345	32	89.6	1.412	3933	77	170.6	0.446	978
-12	10.4	3.453	22320	33	91.4	1.377	3799	78	172.4	0.435	952
-11	12.2	3.405	21345	34	93.2	1.343	3670	79	174.2	0.424	926
-10	14	3.356	20418	35	95	1.309	3547	80	176	0.414	902
-9	15.8	3.307	19537	36	96.8	1.277	3428	81	177.8	0.404	877
-8	17.6	3.258	18698	37	98.6	1.253	3344	82	179.6	0.394	854
-7	19.4	3.208	17901	38	100.4	1.213	3204	83	181.4	0.384	832
-6	21.2	3.158	17142	39	102.2	1.183	3098	84	183.2	0.375	810

272, Oseon-Dong, Kwangsan-Gu,
Kwangju-City, Korea, 506-253
TEL : 82-62-950-6810, 6811
FAX : 82-62-950-6829

© Samsung Electronics Co., Ltd.
Fridge Division 2005. 01
Printed in Korea
Code-No : DA68-01130? REV(0.0)